INSTALLATION AND PROGRAMMING GUIDE

XT75 Control Panel

DIGITAL MONITORING PRODUCTS, INC.

MODEL XT75 CONTROL PANEL
INSTALLATION AND PROGRAMMING GUIDE

© 2026 Digital Monitoring Products, Inc.

Information furnished by DMP is believed to be accurate and reliable.
This information is subject to change without notice

CONTENTS

Get Started 1

Programming Options 1

Quick Reference 1

How to Read This Guide 2

Caution Notes 2

What's Included 2

What You'll Need 2

System Components 3

Wiring Diagram 3

Lightning Protection 3

Accessory Devices 3

XT75 Wiring Diagram 5

Step 1: Mount the Enclosure 6

Step 2: Mount the Keypads 7

Mounting Keypads 7

Understanding Keypad Specifications 7

Step 3: Wire the Power Supply 8

Wire the Primary Power Supply 8

AC Terminals 1 and 2 8

Transformer Type 8

Power LED 8

Wire the Secondary Power Supply 8

Battery Terminals 3 and 4 8

Earth Ground 8

Replacement Period 8

Discharge/Recharge 9

Battery Supervision 9

XT75 Power Requirements 9

XT75 Standby Battery Calculations 9

Step 4: Wire the Terminals 10

Wire for Bell Output - Terminals 5 and 6 10

Wire the Keypad Data Bus - Terminals 7, 8, 9, and 10 10

Terminal 7 - RED 10

Terminal 8 - YEL 10

Terminal 9 - GRN 10

Terminal 10 - BLK 10

Keypad Bus LEDs 10

Programming (PROG) Connection 10

Keypad Addressing 10

Wire Smoke and Glassbreak Detector Output - Terminal 11 11

Wire Burglary Zones - Terminals 12 - 24 11

Operational Parameters 11

Zone Voltages Using 1k Ω Resistors 11

Zone Voltages Using 2.2k Ω Resistors 11

Zone Voltages Using 3.3k Ω Resistors 12

Zone Voltages Using 4.7k Ω Resistors 12

Zone Voltages Using 10k Ω Resistors 12

Zone Response Time 12

Keyswitch Arming Zone 12

Wire Powered Zone for 2-Wire Smoke Detectors - Terminals 25 and 26 12

Step 5: Wire Hardware Components 13

Wire for Annunciator Outputs 13

Harness Wiring 13

Model 860 Relay Module 13

Connect to Ethernet 13

Ethernet LEDs 13

Reset the Panel 14

Connect to Cell 14

Connect to Wi-Fi 14

Wire for On-Board 1100 Series Wireless Antenna Connection 15
Wireless Antenna 15
LED Operation 15
Wire the Receiver 15
Select a Location for the Receiver 16
Mount the Receiver 16
LX-Bus Expansion 16
LX-Bus 16
LX-Bus LEDs 16
X-Bus Expansion 16
X-Bus LEDs 16

Step 6: Install Wireless Keypads 17

Mount the Keypads 17
Associate Wireless Keypads 17
LCD Wireless Keypad 17
Wireless Graphics Touchscreen Keypad 17
Power/Armed LED 17

Step 7: Programming 18

XT75 Programming Information 18
Internal Programmer 18
Getting Started 18
User Menu 18
Accessing the User Menu 18
Program the Panel 18
Programming Menu 19
Reset Timeout 19
Keypads 19
Special Keys 19
COMMAND (CMD) Key 19
Back Arrow (<—) Key 19
Select Keys or Areas 19
Entering Characters Using the Standard Keyboard ... 20
Entering Characters Using the Number Pad 20
Keypad Displays Current Programming 20
Programmer Lockout Codes 20
Installing a Lockout Code 20
Update Panel Firmware on Dealer Admin 20

Initialization 21

Initialization 21
Clear All Memory 21
Clear All Codes 21
Clear All Schedules 21
Clear Display Events Memory 21
Clear Zone Information 21
Clear Area Information 21
Clear Output Information 21
Clear Communication and Remote Options 21
Initialize Remote Key 21
Clear Wi-Fi 21
Set to Factory Defaults 21

Communication 22

Communication 22
Account Number 22
Transmit Delay 22
Communication Path 22
Communication Type 22
Path Type 22
Test Report 23
Test Frequency 23
Test Time 23
Check In 23
Fail Time 23
Encryption 23
Receiver IP 23
Receiver Port 23
Advanced Programming 23
APN 24
Fail Test Frequency 24
Alarm Reports 24
Supervisory/Trouble Reports 24
Opening/Closing and User Reports 24
Door Access Report 25
Send Communication Trouble 25
Send Path Information 25

Network Options 26

Network Options 26
Wi-Fi Setup 26
WPS 26
List 26
Manual 26
Test 27
Wireless Security Type 27
Wireless Network Key 27
DHCP 27
Local IP Address 27
Gateway Address 27
Subnet Mask 27
DNS Server 27
SCS Passphrase 28
734N Listen Port 28
734N Passphrase 28

Device Setup 29

Device Setup 29
Card Formats 29
Format Number 29
Format Name 29
Wiegand Code Length 29
Site Code Position 29
Site Code Length 29
User Code Position 29
User Code Length 29
Require Site Code 29
Site Code Display 29
Number of User Code Digits 30
Device Number 30
Device Name 30
Device Type 30
Display Areas 31
Device Communication Type 31
Serial Number 31
Supervision Time 31
Strike Time 31
Strike Delay 32
Fire Exit Release 32
Public Door 32
Schedule Override 32
Door Real-Time Status 32
Send Door Forced 32
Program 734 Options 32
Activate Zone 2 Bypass 33
Zone 2 Bypass Time 33
Relock on Zone 2 Change 33
Activate Zone 3 Request to Exit 33
Zone 3 REX Strike Time 33
Activate Onboard Speaker 33
Card Options 34
No Communication with Panel 34

Remote Options 35

Remote Options 35
Remote Key 35
App Key (For EASYconnect) 35
Remote Disarm 35
APN 35
Integrator Connection 35
Integrator Incoming TCP Port 35
Integrator IP Address 35
Integrator Outbound TCP Port 35
Integrator Backup Connection 36
Integrator Backup IP Address 36
Arm and Disarm Reports 36
Zone Reports 36
User Command Reports 36
Door Access Reports 36
Supervisory Reports 36
Integrator Passphrase 36
Video Reports 36

System Reports....37

System Reports....37
Abort Reports....37
Zone Restoral Reports....37
Bypass Reports....37
Schedule Change Reports....37
Code Change Reports....37
Ambush....37
Late To Open....37
Early To Close....37
Send System Information....38

System Options....39

System Options....39
System....39
Closing Wait....39
Entry Delay 1....39
Entry Delay 2....39
Cross Zone Time....39
Power Fail Delay....40
Swinger Bypass Trips....40
Reset Swinger Bypass....40
Zone Activity Hours....40
Time Zone Changes....40
Latch Supervisory Zones....41
Bypass Limit....41
House Code....41
Detect Wireless Jamming....42
Built-In 1100 Wireless....42
Wireless Encryption....42
Enter Passphrase....42
Trouble Audible Annunciation....42
Enable Keypad Panic Keys....42
Occupied Premises....42
Keypad Armed LED....42
Use False Alarm Question....43
Weather Zip Code....43
Celsius Temperature Option....43

Bell Options....44

Bell Options....44
Bell Cutoff Time....44
Automatic Bell Test....44
Bell Output....44
Bell Action....44
Fire....44
Burglary....44
Supervisory....44
Panic....44
Emergency....44
Auxiliary 1....45
Auxiliary 2....45
Carbon Monoxide (CO)....45

Output Options....46

Output Options....46
Cutoff Outputs....46
Output Cutoff Time....46
Communication Failure Output....46
Fire Alarm Output....46
Fire Trouble Output....46
Panic Alarm Output....46
Ambush Output....47
Entry Output....47
Begin Exit Output....47
End Exit Output....47
Ready Output....47
Disarmed Output....47
Late To Close Output....47
Device Fail Output....47
Sensor Reset Output....47
Closing Wait Output....47
Arm-Alarm Output....48
Supervisory Alarm Output....48
Heat Saver Temperature....48
Cool Saver Temperature....48
AC Fail Output....48
Carbon Monoxide Alarm Output....48
Lockdown Output Alarm Output....48
Zone Monitor Output....48

Output Information 49

Output Information 49
Output Number 49
Output Name 49
Output Real-Time Status 49
Serial Number 49
Supervision Time 50
Trip with Panel Bell Option 50

Area Information 51

Area Information 51
Exit Delay 51
Closing Check 51
Closing Code 51
Any Bypass 51
Area Schedules 52
Area Number 52
Area Name 52
Opening/Closing Reports 52
Automatic Arming 52
Automatic Disarming 52
Bad Zones 53
Armed Output Number 53
Late Output Number 53
Late Arm Delay 53

Zone Information 54

Zone Information 54
Zone Number 54
Zone Name 54
Zone Location 54
Zone Type 55
Arm Areas 55
Area Assignment 55
Fire Bell Output 56
Style 56
Expander Serial Number 56
Next Zone 56

DMP Wireless 57

Wireless 57
Competitor Wireless 57
Competitor Wireless Serial Number 57
Serial Number Entry 57
Contact 57
Supervision Time 58
LED Operation 58
Disarm/Disable 58
PIR Pulse Count 58
PIR Sensitivity 58
Pet Immunity 58
Next Zone 58

1100 Series Key Fobs 59

Key Fob User Number 59
Key Fob Serial Number 59
Key Fob Supervision Time 59
Number of Key Fob Buttons 59
Key Fob Button Selection (Four Buttons) 59
Key Fob Button Selection (Two Buttons) 59
Button Action 60
Button Press Time 60
Arm/Disarm Area Selection 60
Output Number 60
Output Action 61
Alarm Action 61
Disarmed Open 61
Message To Transmit 61
Output Number 62
Output Action 62
Swinger Bypass 62
Prewarn Keypads 62
Chime 62
Entry Delay 63
Cross Zone 63
Priority 63
Zone Real-Time Status 63
Traffic Count 63
Zone Audit Days 63
Zone Number 63

Stop 64

Stop 64

Set Lockout Code 65

Set Lockout Code 65

Appendix 66

Status List 66

False Alarm Reduction 66

System Recently Armed Report 66

Diagnostics Function 67

Zone Finder 67

Zone State 67

LX-Bus Status 67

X-Bus 68

MAC Address 68

Serial Number 68

Loader Version 68

Carrier Selection 68

Communication Status 68

Cellular Results 68

Network Results 69

Using the Walk Test 70

Walk Test 70

Zone Types 70

Bell Action 70

Trip Counter for Walk Test (STD) 71

Trip Counter For DMP Wireless Test (WLS) 71

Test End Warning 71

Failed Zones Display 71

Troubleshooting 74

Common LCD Keypad Displays 74

Wiring Diagrams 75

System Sensor 2-Wire Smoke Detectors 75

Specifications 76

Power Supply 76

Enclosure 76

Communication 76

Keypads/Expansion 76

Panel Zones 76

Number of Zones 77

Outputs 77

GET STARTED

Before starting to program the panel, make sure the panel is properly grounded and AC and battery power is applied to the appropriate panel terminals.

Programming Options

System programming can be done from a hardwired or wireless keypad or Dealer Admin (dealer.securecomwireless.com). This guide will focus primarily on programming from a hardwired or wireless keypad.

Quick Reference

XT75	
Total Number of Zones	142
Number of Possible Hardwired Zones	92
Number of Possible Wireless Zones	100
Number of Areas	6
Communication Paths	1-4
Event Buffer	1,000
Number of User Codes	200
Number of Door Access Points	8
Number of Supervised Keypads	8

Onboard Panel Outputs	1-4
450-474	Slow response time wireless outputs (activates within 15 seconds)
480-499	Fast response time wireless outputs (activates within 1 second)
500 - 549 (wired or wireless)	LX-Bus output, Relay output, Zone Expansion output
550-599 (wireless)	
DO1 - DO8	Keypad door strike relay for address 1 - 8
F1 - F20	Used for Z-Wave favorites

The panel can be programmed to operate as any of the following system types:

- All/Perimeter system that provides one perimeter area and one interior area
- Home/Sleep/Away system that provides one perimeter, one interior, and one bedroom area. The bedroom area provides for any protection devices the user wants disarmed during their sleeping hours and armed as Away.
- Six area system that provides areas of protection that can be independently armed or disarmed.

How to Read This Guide

Caution Notes

Throughout this guide you will see caution notes containing information you need to know when installing the panel. These cautions are indicated with a ⚡ yellow lightning bolt. Whenever you see a caution note, make sure you completely read and understand its information. Failing to follow the caution note can cause damage to the equipment or improper operation of one or more components in the system.

What's Included

Your panel may include more devices and accessories than what is shown below.

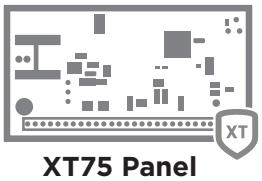

XT75 Panel

Hardware Pack

What You'll Need

- Drill
- Pliers
- Wire connectors

SYSTEM COMPONENTS

Wiring Diagram

The system wiring diagram in *"Figure 1: System Wiring Diagram"* shows some of the accessory devices for use in various applications. A description of each module follows.

Lightning Protection

Metal Oxide Varistors and Transient Voltage Suppressors help protect against voltage surges on input and output circuits. This transient protection provides additional resistance to electrical surges such as lightning. Additional surge protection is available by installing the DMP 370 or 370RJ Lightning Suppressors.

Accessory Devices

CELLULAR COMMUNICATOR CARDS	
263LTE Cellular Communicator	Allows you to connect the XT75 to the Verizon, AT&T, or FirstNet LTE network.
263EXT Cellular Extension Module	Allows you to remote the cell module away from the panel.
263LTE-2 Cellular Communicator	Allows you to connect to both Verizon and AT&T LTE network. Panel firmware Version 251 or higher required

ZONE AND OUTPUT EXPANSION MODULES	
710 Bus Splitter/Repeater	Increases keypad wiring distance to 2500 feet.
711, 711S Single Point Zone Expander	Provides one Class B zone for burglary devices and non-powered fire devices.
712-8 Zone Expander	Provides 8 zones for burglary devices.
714, 714-8, 714-16 Zone Expander	Provides Class B zones for burglary and non-powered fire devices.
715, 715-8, 715-16 Zone Expander	Provides 12 VDC Class B powered zones for smoke detectors, glassbreak detectors, and other 2- or 4-wire devices.
860, 860-4 Relay Output Module	Provides one relay and three relay sockets for expansion of up to four relays.
867 Notification Module	Provides one supervised Class B circuit for 12 VDC or 28 VDC notification devices. The 867 connects to the LX-Bus and supervises Ground Fault, Open and Short conditions on the notification circuit.

INTERFACE MODULE	
734 Access Control Module	Provides arming, disarming, and codeless entry using access control readers.
738I ITI Interfect Module	Allows you to interface ITI™ SuperBus™ 2000 Series Wireless receivers with the DMP XT Series and XR Series Control Panels.
738Z+ Z-Wave Interface Module	Provides connection for Z-Wave modules.

WI-FI MODULE	
763 Module	Allows you to add Wi-Fi alarm signal communication to XT75 panels.

SMOKE/HEAT DETECTORS	
2W-BLX Conventional Smoke Detector	A photoelectric detector that includes an addressable single point module for connection to the LX-Bus.
2WT-BLX Conventional Smoke/ Heat Detector	A photoelectric detector that includes an addressable single point module with a restorable, built-in fixed temperature thermal detector capable of sensing a temperature higher than 135 °F

KEYPADS	
7000 Series Thinline™ and Aqualite™ Keypad	Allows you to control the panel from various remote locations. Connect up to eight keypads. Model 7060, 7063, 7070, 7073, 7160, 7173 Thinline™ Keypads, 7060A and 7073A Aqualite™ Keypads.
7800 Series 5-Inch Touchscreen Keypads	Allows you to control the panel from various remote locations. Connect up to eight keypads. 7872 and 7873 Graphic Touchscreen Keypads.
8860 Series 7-Inch Touchscreen Keypads	Allows you to control the panel from various remote locations. Refer to the Network section for available number of keypads based on panel settings. 8860 Graphic Touchscreen Keypad using a hardwired or Wi-Fi connection.
9000 Series Wireless LCD Keypads	Allows you to control the panel from various remote locations. Connect up to seven keypads. 9060, 9063 Wireless Keypads.
9800 Series Wireless Graphic Touchscreen Keypads	Allows you to control the panel from various remote locations. Connect up to seven keypads. 9862 Wireless Keypads.

DMP TWO-WAY WIRELESS DEVICES	
1100XH/1100XHE Receiver	Supports transmitters in residential or commercial wireless operation on the keypad bus. The 1100XHE features 128-bit AES encryption.
1100R/1100RE Repeater	Provides additional range for wireless devices. The 1100RE features 128-bit AES encryption.
11100T/1100TF Translator	Allows upgrades of non-DMP systems with one way, low frequency, wireless transmitters to DMP.
1101 Universal Transmitter	Provides both internal and external contacts that may be used at the same time to yield two individual reporting zones from one wireless transmitter. Provides Disarm/Disable functionality. The 1101 features built-in optional 128-bit AES encryption.
1102 Universal Transmitter	Provides one external contact. Provides Disarm/Disable functionality. The 1102 features built-in optional 128-bit AES encryption.
1103 Universal Transmitter	Provides both internal and external contacts that may be used at the same time to yield two individual reporting zones from one wireless transmitter. Requires EOL resistor for external contact. Provides Disarm/Disable functionality. The 1103 features built-in optional 128-bit AES encryption.
1106 Universal Transmitter	Provides both internal and external contacts that may be used at the same time to yield two individual reporting zones from one wireless transmitter. Provides Disarm/Disable functionality. The 1106 features built-in optional 128-bit AES encryption.
1107 Micro Window Transmitter	Provides a window transmitter and magnet.
1108 Doorbell Module	The 1108 Doorbell Module monitors doorbell button presses.
1114 Four-Zone Expander	Provides four wireless zones with EOL resistors.
1115 Temperature Sensor and Flood Detector	Temperature and flood detector with an internal temperature sensor. Can be paired with 470LS or T280R remote sensors.
1116 Relay Output	Provides one Form C relay.
1117 LED Annunciator	Provides a visual system status indicator.
1119 Door Sounder	Provides a battery operated sounder.
1122 PIR Motion Detector	Provides motion detection with pet immunity.
1126R PIR Motion Detector	Ceiling mount motion detector with panel programmable sensitivity and Disarm/Disable functionality.
1127C/1127W PIR Motion Detector	Wall mount motion detector with panel programmable sensitivity and Disarm/Disable functionality.
1128 Glassbreak Detector	Detects the shattering of framed glass mounted in an outside wall and provides full-pattern coverage and false-alarm immunity.
1132 Recessed Contact	Provides concealed protection for doors, windows or other applications.
1134 Access Control Module	Allows you to use the access control capability of DMP Panels using smartcard, proximity, mag stripe, or biometric readers, or other compatible authentication devices.
1135/1135E Siren	Provides a wireless siren. The 1135E features 128-bit AES encryption.
1136 Remote Chime	The 1136 Wireless Remote Chime is a multi-function sounder that plugs directly into a standard 110 VAC wall outlet.
1139 Bill Trap	Provides a silent alarm option for retail and banking cash drawers.
1141 Wall Button	One button wall mounted wireless transmitter.
1142BC Two-Button Panic Belt Clip Transmitter	Provides portable two-button panic operation. The 1142BC features built-in optional 128-bit AES encryption.
1142 Two-Button Panic Transmitter	Provides permanently mounted under-the-counter two-button panic operation. The 1142 features built-in optional 128-bit AES encryption.
1144-4 (Four-Button) 1144-2 (Two-Button) 1144-D (Dual-Button) 1144-1 (One-Button)	Key Fob transmitters designed to clip onto a key ring or lanyard. The key fob transmitters feature built-in optional 128-bit AES encryption.
1148 Personal Pendant	One button one-button, wireless emergency transmitter designed to be worn as a wristband or on a break-away lanyard.
1154 4-Zone Input Module	Converts up to four existing normally closed, hardwired zones into wireless zones.
1158 Eight-Zone Input Module	Converts up to eight existing normally closed, hardwired zones into wireless zones.
1164/1164NS Commercial Smoke	Battery powered, wireless, low profile, photoelectric smoke detector. The 1164 also offers a synchronized sounder.
1166 Smoke Ring	Installed with any traditional AC-powered interconnected smoke detector system and provides an audible alert in the event of a fire.
1168 CO/Smoke Detector	Wireless CO/Smoke/Low Temp detector.
1183-135F Heat Detector	Fixed temperature heat detector.
1183-135R Heat Detector	Fixed temperature and rate-of-rise heat detector.
1184 Carbon Monoxide Detector	Carbon Monoxide Detector.

XT75 WIRING DIAGRAM

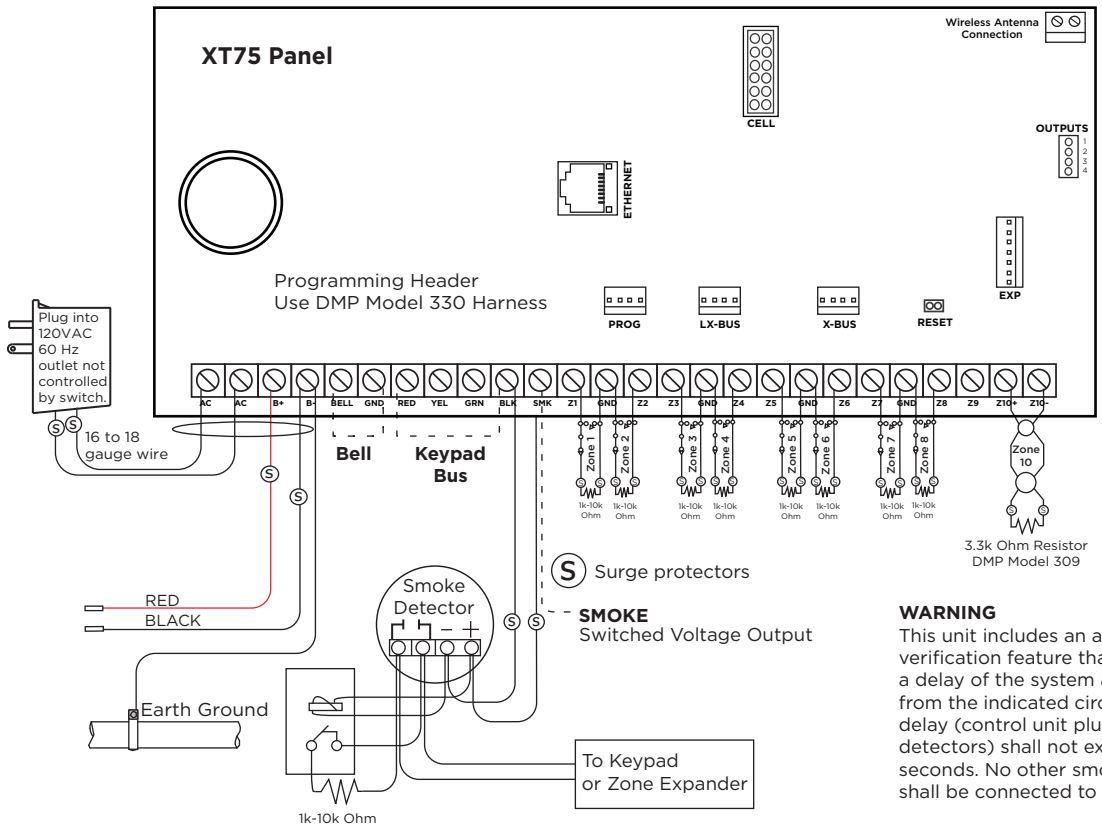

WARNING
This unit includes an alarm verification feature that will result in a delay of the system alarm signal from the indicated circuits. The total delay (control unit plus smoke detectors) shall not exceed 60 seconds. No other smoke detector shall be connected to these circuits.

Figure 1: System Wiring Diagram

USE MARKING
Commercial Central Station; Household Fire and Burglar Warning System Control Unit (PSDN: IP or Cellular)

TYPES OF SERVICE
Suitable for Household Fire and Household Burglary. Test weekly.

LISTED APPLICATIONS
For listed applications the maximum current from a combination of bell output and auxillary output is 2.5 amps.

NFPA 72
This equipment should be installed in accordance with Chapter 11 of the National Fire Alarm Code, ANSI/NFPA 72-2002, (National Fire Protection Association, Batterymarch Park, Quincy, MA 02269). Printed information describing proper installation, operation, testing, maintenance, evacuation planning, and repair service is to be provided with this equipment. Warning: Owner's instruction notice, not to be removed by anyone except occupant.

HOUSEHOLD FIRE WIRING
Recognized limited energy cable must be used for connection of all initiating, indicating, and supplementary devices.

POWER LIMITED
All circuits on the Model XT75 panel comply with the requirements for inherent power limitation and are Class 2.

DMP TRANSFORMERS
Model 327:
16.5 VAC 50 VA Class 2 plug-in.

MAXIMUM OUTPUT PER CIRCUIT
- Keypad - 2 A
- LX-Bus/X-Bus - 1 A
- Bell - 1.5 Amps
- Smoke - .5 Amp

Caution: Cannot exceed 2.5 Amps combined

ZONE 10 COMPATIBILITY IDENTIFIER
A

MAXIMUM OPERATING RANGE
8.8 VDC - 14.2 VDC

AUXILIARY OUTPUT
Minimum voltage on Auxiliary output to process Sensor trips is 10.4VDC.

EXP HEADER
The 763 Wi-Fi Module includes a cable to connect to the panel and operates at 12 VDC from the panel power supply.

SECONDARY POWER SUPPLY
1.2 Amps maximum charging current.
Use only 12 VDC rechargeable batteries.
Replace every 3 to 5 years.

LISTED RESISTORS
3.3k Ohm - DMP Model 309

MAXIMUM AC WIRE DISTANCE
16 gauge wire: 70 feet
18 gauge wire: 40 feet

ZONES 1-9
1k to 10k Ohm EOL on each zone

ZONE 10
Heat detectors, manual pull stations, or any other shorting device. Unlimited number of units.

Verification Zone 10	Control Unit Delay 13.6 sec.	Smoke Model _____	Detector Delay _____sec.
For Wireless Devices, Control Unit delay is 0 (zero).			

STEP 1: MOUNT THE ENCLOSURE

The metal enclosure must be mounted in a secure, dry place to protect the panel from damage due to tampering or the elements. It is not necessary to remove the PCB when installing the enclosure. The PCB may be installed in the standard 340 enclosure, optional 341 Kiosk enclosure, optional 349 Medium enclosure, or the optional 349A Attack enclosure.

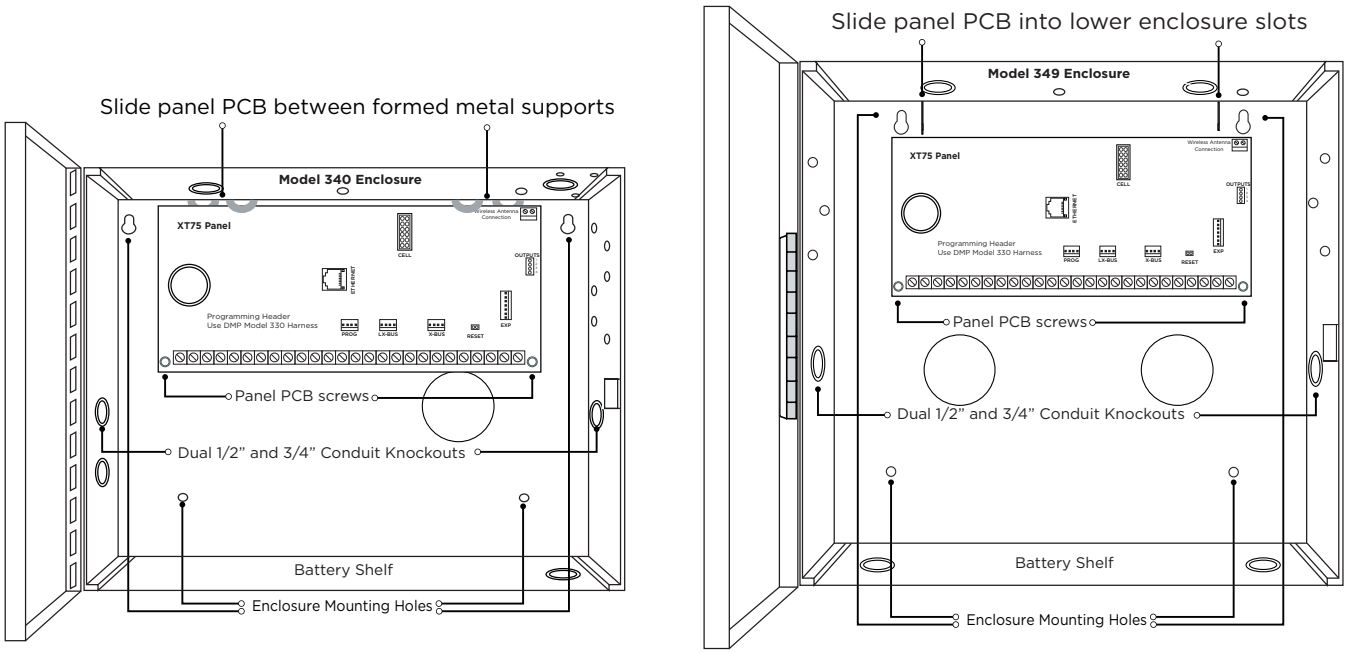

Figure 2: Standard 340 Enclosure (left), Optional 349 Enclosure (right)

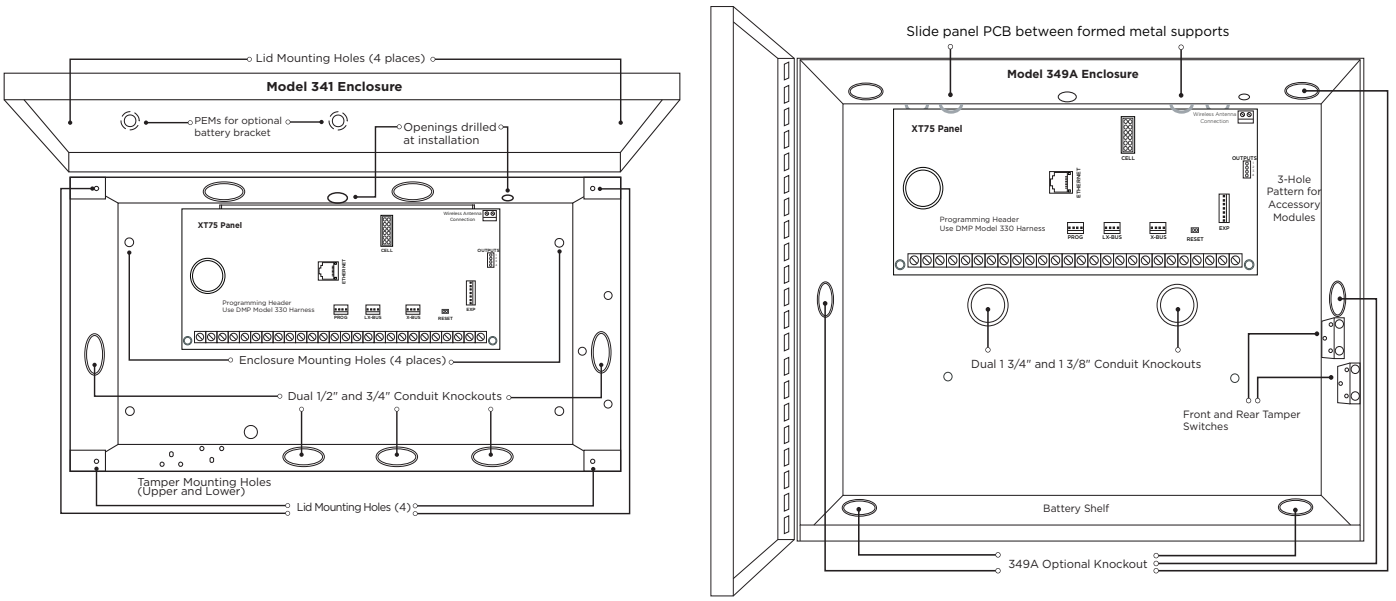

Figure 3: Optional 341 Enclosure (left), Optional 349A Enclosure (right)

STEP 2: MOUNT THE KEYPADS

Mounting Keypads

DMP keypads have removable covers that allow the base to be mounted on a wall or other flat surface using the screw holes provided on each corner.

For mounting keypads on solid walls, or for applications where conduit is required, use a DMP 695 or 696 keypad conduit backbox.

Understanding Keypad Specifications

Several factors determine the performance characteristics of the keypad bus: the length of wire used, the number of devices connected, and the voltage at each device. When planning a keypad bus installation, keep in mind the following four specifications:

- DMP recommends using 18- or 22-gauge unshielded wire for all keypad circuits. Do not use twisted pair or shielded wire for keypad bus data circuits.
- On keypad bus circuits, to maintain auxiliary power integrity when using 22-gauge wire do not exceed 500 feet. When using 18-gauge wire do not exceed 1,000 feet. To increase the wire length or to add devices, install an additional power supply.
- Maximum distance for any one bus circuit (length of wire) is 2,500 feet regardless of the wire gauge. This distance can be in the form of one long wire run or multiple branches with all wiring totaling no more than 2,500 feet. As wire distance from the panel increases, DC voltage on the wire decreases.
- Maximum voltage drop between the panel (or auxiliary power supply) and any device is 2.0 VDC. If the voltage at any device is less than the required level, add an auxiliary power supply at the end of the circuit. When voltage is too low, the devices cannot operate properly.

For additional information refer to the 710 Installation Sheet (LT-0310) and or the LX-Bus/Keypad Bus Wiring Application Note (LT-2031).

STEP 3: WIRE THE POWER SUPPLY

Wire the Primary Power Supply

AC Terminals 1 and 2

Connect the transformer wires to terminals 1 and 2 on the panel. Use no more than 70 ft. of 16 gauge, or 40 ft. of 18 gauge, wire between the transformer and the panel to deliver a minimum of 15.5 VAC when 1 Amp of current draw is used from the auxiliary power supply terminal 7.

Caution: Always ground the panel before applying power to any devices. The panel must be properly grounded before connecting any devices or applying power to the panel. Proper grounding protects against Electrostatic Discharge (ESD) that can damage system components. See *"Earth Ground"*, in the Secondary Power Supply section.

Transformer Type

The transformer for the panel is 16.5 VAC 50 VA. This provides up to 1.5 Amps of bell output current, 2 Amp of auxiliary current, and .5 Amp of smoke detector output. Use the 327 plug-in transformer with the panel. The total current available is limited by the total battery standby requirements of the installation.

Caution: The transformer must be connected to a dedicated 120 VAC 60 Hz commercial power outlet that is not controlled by a wall switch. Never share the transformer output with any other equipment.

Power LED

When either AC transformer power or DC battery power is connected to the panel the PWR LED shows steady green.

Wire the Secondary Power Supply

Battery Terminals 3 and 4

Connect the black battery lead to the negative battery terminal. The negative terminal connects to the enclosure ground internally through the XT75 circuit board. Connect the red battery lead to the positive battery terminal. Observe polarity when connecting the battery.

Add a second battery in parallel using the DMP Model 318 Dual Battery Harness. DMP requires each battery be separated by a PTC in the battery harness wiring to protect each battery from a reversal or short within the circuit. See Figure 4.

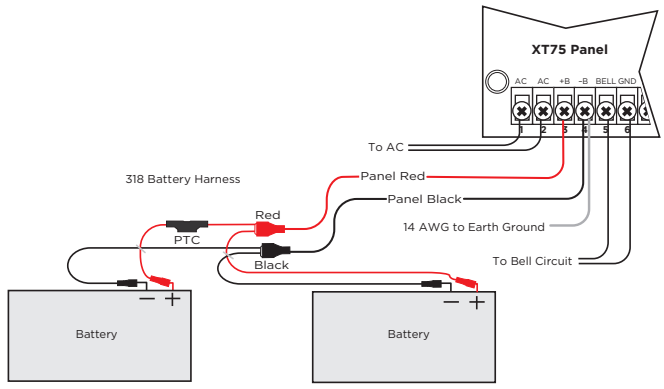

Figure 4: Wiring Multiple Batteries

Caution: Use sealed lead-acid batteries only: Use 12 VDC sealed lead-acid rechargeable battery. Batteries supplied by DMP have been tested to ensure proper charging with DMP products. Gel Cell batteries cannot be used with the XT75 panel.

Earth Ground

Terminal 4 of the panel must be connected to earth ground using 14 gauge or larger wire to provide proper transient suppression. DMP recommends connecting to a metal cold water pipe or ground rod only. Do not connect to electrical conduit.

Replacement Period

DMP recommends replacing the battery every 3 to 5 years under normal use.

Discharge/Recharge

The panel battery charging circuit float charges at 13.9 VDC at a maximum current of 1.2 Amps using a 50 VA transformer. The total current available is reduced by the combined auxiliary current draw from terminals 7, 11, and 25. The various battery voltage levels are listed below:

- Battery Trouble: Below 11.9 VDC
- Battery Restored: Above 12.6 VDC

Battery Supervision

The panel tests the battery when AC power is present. This test occurs every three minutes and lasts for five seconds. During the test, the panel places a load on the battery, and if the battery voltage falls below 11.9 VDC, a low battery is detected. If AC power has failed, a low battery is detected any time the battery voltage falls below 11.9 VDC.

If a low battery is detected with AC power present, the test repeats every two minutes until the battery charges above 12 VDC indicating the battery has restored voltage. If a weak battery is replaced with a fully charged battery, the restored battery will not be detected until the next two-minute test is done.

XT75 Power Requirements

During AC power failure, the panel and all auxiliary devices connected draw their power from the battery. All devices must be taken into consideration when calculating the battery standby capacity. On the following page is a list of the power requirements of the panel. Add the additional current draw of DMP keypads, smoke detector output, and any other auxiliary devices used in the system for the total current required. The total is then multiplied by the total number of standby hours required to arrive at the total Amperehours required.

XT75 Standby Battery Calculations

For complete battery calculations, see the Battery Calculator.

STEP 4: WIRE THE TERMINALS

Wire for Bell Output - Terminals 5 and 6

Nominal 12 VDC is supplied by terminal 5 on the panel to power alarm bells or horns. The output is rated for a maximum of 1.5 Amps with a 50 VA transformer. This output can be steady, pulsed, or Temporal Code 4 depending upon the Bell Action specified in Bell Options programming. Terminal 6 is the ground reference for the bell circuit. If using a horn or siren, a 1k ohm resister should be added across the bell circuit for supervision.

Wire the Keypad Data Bus - Terminals 7, 8, 9, and 10

Terminals 7, 8, 9, and 10 of the panel are designated as the keypad data bus. In addition to keypads, the XT75 allows the connection of any combination of zone expansion modules, Glassbreak Detectors, and PIRs to the keypad bus up to the maximum of eight devices.

Terminal 7 - RED

Nominal 12 VDC is supplied at terminal 7 to power keypads and zone expanders. This is also where power for any auxiliary device is supplied. The ground reference for terminal 7 is terminal 10. The maximum output is rated at 2 Amps. All auxiliary devices totaled together must not exceed the Terminal 7 maximum current rating of 2 Amps. When the number of keypads or other expansion devices attached exceeds the amount of output current available, attach an external power supply as defined in the 710 Installation Sheet (LT-0310).

Terminal 8 - YEL

Data receive from keypads and zone expanders.

Terminal 9 - GRN

Data transmit to keypads and zone expanders.

Terminal 10 - BLK

Terminal 10 is the ground reference for LCD keypads, zone expanders, and any auxiliary devices being powered by terminals 7 and 11.

Keypad Bus LEDs

The two LEDs located just above terminal 13 indicate keypad transmit data (XMIT) and keypad receive data (RCV). The bottom LED flashes green to indicate data being transmitted from the panel. The top LED flashes yellow to indicate data being received by the panel from keypads, zone expanders, etc.

Programming (PROG) Connection

A locking 4-pin PROG header is provided to connect a keypad when using a DMP Model 330 Programming Cable. This provides a quick and easy connection for programming the panel.

Keypad Addressing

Keypad Bus expansion zones are numbered in groups of four corresponding to the address. For example, address 1 is zones 11-14 and address 5 is zones 51-54.

There are a maximum of 32 zones possible on the Keypad Bus. All keypad zones terminate with a 1k 0hm EOL resistor.

ADDRESS	XT75 ZONE NUMBER
1	11-14
2	21-24
3	31-34
4	41-44
5	51-54
6	61-64
7	71-74
8	81-84

Wire Smoke and Glassbreak Detector Output - Terminal 11

Nominal 12 VDC at .23 Amp maximum (shared by terminal 25) is supplied at terminal 11 to power 4-wire smoke detectors or other auxiliary powered devices. This output can be turned off by the user for 5 seconds using the Sensor Reset option in the User Menu. Terminal 10 is the ground reference for terminal 11.

Wire Burglary Zones - Terminals 12 - 24

On the XT75, terminals 12 to 24 are the nine burglary zones. For programming purposes, the zone numbers are 1 to 9. The zone configurations on terminals 12 to 24 are described below.

TERMINAL	FUNCTION
12	Zone 1 voltage sensing
13	Ground for zones 1 & 2
14	Zone 2 voltage sensing
15	Zone 3 voltage sensing
16	Ground for zones 3 & 4
17	Zone 4 voltage sensing
18	Zone 5 voltage sensing
19	Ground for zones 5 & 6
20	Zone 6 voltage sensing
21	Zone 7 voltage sensing
22	Ground for zones 7, 8, & 9
23	Zone 8 voltage sensing
24	Zone 9 voltage sensing

The voltage sensing terminal measures the voltage across the 1k to 10k Ohm End-of-Line resistor and the zone's ground terminal. Dry contact sensing devices can be used in series (normally-closed) or in parallel (normally-open) with any of the burglary protection zones.

Operational Parameters

Each burglary protection zone detects three conditions: open, normal, and short.

The parameters for each are listed below:

CONDITION	RESISTANCE ON ZONE	VOLTAGE ON ZONE TERMINAL
Open	over 1300 ohms	over 4.2 VDC
Normal	600 to 1300 ohms	1.2 to 2.0 VDC
Short	under 600 ohms	under 1.2 VDC

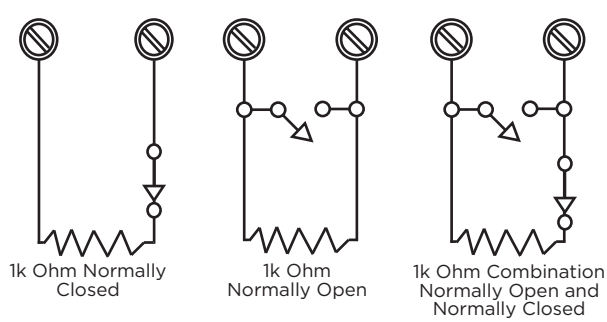

Figure 5: Protection Zone Contact Wiring

Zone Voltages Using 1k Ω Resistors

STATE	VOLTAGE
Open	≥ 1.8 VDC
Normal	1.7 VDC
Short	0 - 1.6 VDC

Zone Voltages Using 2.2k Ω Resistors

STATE	VOLTAGE
Open	≥ 3 VDC
Normal	2..6 VDC
Short	0 - 2.5 VDC

Zone Voltages Using 3.3k Ω Resistors

STATE	VOLTAGE
Open	≥ 3.2 VDC
Normal	3.1 VDC
Short	0 - 3 VDC

Zone Voltages Using 4.7k Ω Resistors

STATE	VOLTAGE
Open	≥ 3.6 VDC
Normal	3.5 VDC
Short	0 - 3.4 VDC

Zone Voltages Using 10k Ω Resistors

STATE	VOLTAGE
Open	≥ 4.3 VDC
Normal	4.2 VDC
Short	0 - 4.1 VDC

Zone Response Time

A condition must be present on a zone for 500 milliseconds before it is detected by the panel. Ensure detection devices used on the protection zones are rated for use with this delay.

Keyswitch Arming Zone

You can use a momentary keyswitch on a zone programmed as an Arming type for use in arming and disarming the system without a code.

Wire Powered Zone for 2-Wire Smoke Detectors - Terminals 25 and 26

A resettable 2-wire Class B powered zone is provided on terminals 25 (positive) and 26 (negative) of the panel. For programming purposes, the zone number is 10 on the XT75. The zone uses a Model 309, 3.3k ohm EOL resistor (provided with the panel) and has an operating range of 8.8 to 13.9 VDC.

The compatibility identifier is: **B**.

Caution: Sensor reset on zone 10 drops power to devices on this zone, causing the panel to sense an open condition on all zone types other than Fire, Fire Verify, and Supervisory. Whenever non-Fire and non-Supervisory zone types are used on zone 10, make the appropriate adjustments to the zone's Armed Action to prevent false alarms from occurring.

STEP 5: WIRE HARDWARE COMPONENTS

Use this section for reference when using any of these hardware components.

Wire for Annunciator Outputs

The four annunciator outputs can be programmed to indicate the activity of the panel's zones or conditions occurring on the system. Annunciator outputs do not provide a voltage but instead switch-to-ground voltage from another source. The outputs can respond to any of the conditions listed below:

1. Activation by zone condition: Steady, Pulse, Momentary, or Follower
2. Manually from the keypad
3. Communication failure
4. Armed area annunciation
5. Fire Alarm or Fire Trouble
6. Ambush alarm
7. Exit and Entry timers
8. System Ready
9. Late to Close

Harness Wiring

The open collector outputs are accessible by installing the DMP 300 Harness on the 4-pin **OUTPUTS** header.

The output locations are shown below. For listed applications, devices connected to outputs must be located within the same room as the panel.

OUTPUT	COLOR	WIRE
1	Red	1
2	Yellow	2
3	Green	3
4	Black	4

Model 860 Relay Module

Connect a Model 860 Relay Module to the panel to provide relays for the annunciator outputs that can be used for electrical isolation between the alarm panel and other systems or for switching voltage to control various functions. The module includes one relay and provides three additional sockets for expansion of up to four relays. Power is supplied to the relay coils from the panel keypad bus. The 860 mounts inside the panel enclosure using the 3-hole mounting configuration. Plastic standoffs are provided with the module for ease of installation. A 4-wire harness is also provided that connects the Model 860 to the panel. Relay Contact Rating: 1 Amp at 30 VDC.

Connect to Ethernet

The **ETHERNET** Connector is available on the Network version and connects directly to an Ethernet network using a standard patch cable.

Ethernet LEDs

The two LEDs, located on the left side of the **ETHERNET** Connector, indicate network operation. The top, Link LED is a steady green light when an ethernet cable is connected. The bottom, Activity LED flashes yellow to indicate messages are being received or transmitted.

Reset the Panel

The **RESET** header is located just above the terminal strip on the right side of the circuit board and is used to reset the XT75 microprocessor. To reset the panel when first installing the system, install the reset jumper before applying power to the panel. After connecting the AC and battery, remove the reset jumper.

To reset the panel while the system is operational, for example, prior to reprogramming, install the reset jumper without powering down the system. Remove the reset jumper after one or two seconds.

After resetting the panel, begin programming within 30 minutes. If you wait longer than 30 minutes, reset the panel again. Refer to Figure 7 on the next page.

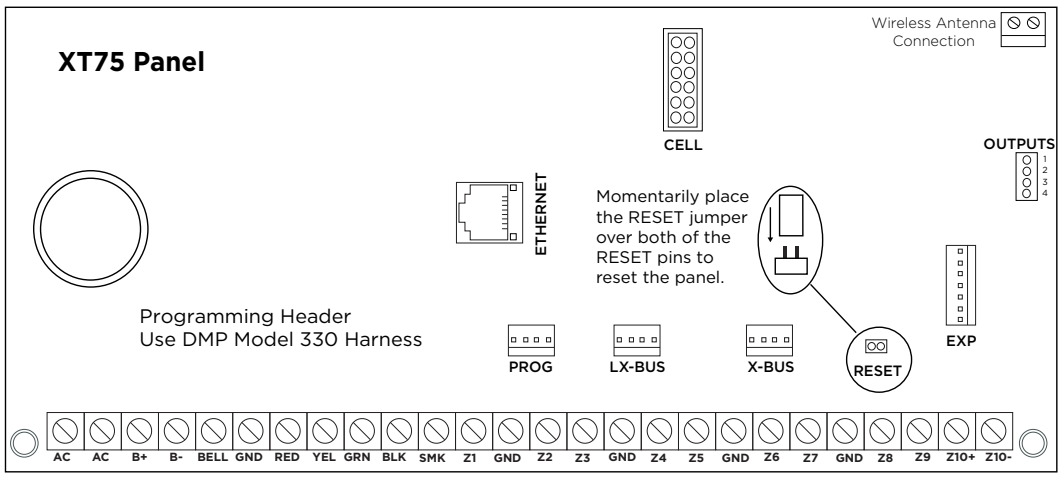

Figure 6: Panel Showing the RESET Header

Connect to Cell

Caution: Fully power down the panel before connecting or disconnecting the cell module to avoid causing damage to the panel or module.

The **CELL MODULE** header is provided to connect a 263 Series Cellular Communicator. The cellular antenna connection protrudes through the top of the enclosure. A brass washer is required if installing a 263LTE Series to an XT50 or XT75 panel.

Note: Do not misalign the cell module 12-pin connector onto cell module header. If needed, the PCB can be removed from the enclosure to allow placement of the cell module.

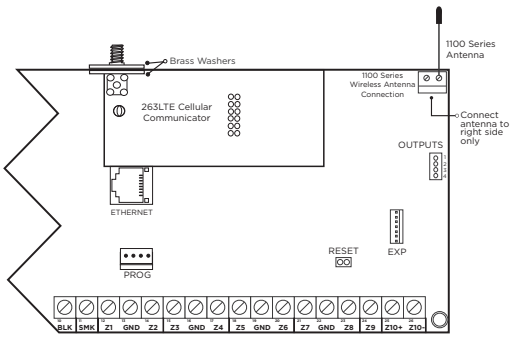

Figure 7: Cellular and 1100 Series Wireless Antenna Connections

Connect to Wi-Fi

Caution: Fully power down the panel before connecting or disconnecting the Wi-Fi module to avoid causing damage to the panel or module.

The 763 Wi-Fi Module allows you to add Wi-Fi alarm signal communication to XT75 panels. The 763 connects to the 7-pin EXP header on compatible panels using the included cable and operates at 12 VDC from the panel power supply.

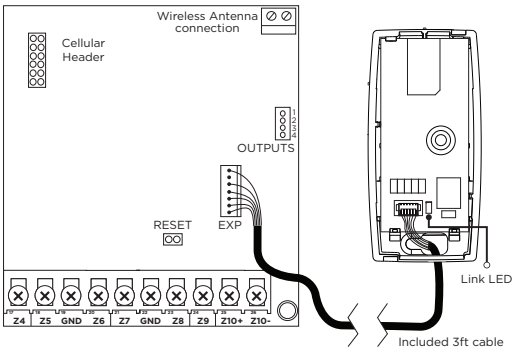

Figure 8: 763 to XT75 Panel

Wire for On-Board 1100 Series Wireless Antenna Connection

Wireless Antenna

The XT75 wireless antenna (ANT) terminal block is located at the top right corner of the circuit board. The antenna installs through a small opening in the top of the enclosure and is attached to the panel using the right terminal. The left terminal is not used.

The XT75 built-in wireless operates with DMP 1100 Series transmitters. See *"Accessory Devices"*.

LED Operation

Green (TX): With a wireless house code enabled, the green LED flashes every time the receiver transmits (32 times per second). If a house code is not programmed in the panel, the panel is reset, or the panel is powered off, the green LED will be off. Under normal operation, the green LED flashes constantly with no interruption or change.

Yellow (RX): The yellow LED flashes every time the receiver hears a message from a programmed wireless transmitter. When a message is sent by a transmitter, typically by pressing or releasing the tamper switch, the yellow LED should flash indicating that the receiver received a message from the transmitter. If the LED never flashes, the transmitter is not getting through to the receiver. This could be because of a misprogrammed serial number or the transmitter is too far away. Under normal operation, the yellow LED will flash at every trip of every wireless transmitter and occasionally when the transmitters perform their periodic check-in. It is not unusual for this LED to stay off for many minutes at a time when no transmitters are communicating.

Wire the Receiver

The panel immediately recognizes the 1100XH if the panel is programmed with a house code and built-wireless selected. Do not use shielded wire between the panel and receiver.

1. Connect the red, yellow, green, and black wires to the **PANEL** terminal on the 1100XH.
2. Connect the other end of the wires to the **XBUS** on the panel.
3. Snap the cover back onto the base.

Note: The receiver will not be able to operate if it's connected to the keypad bus.

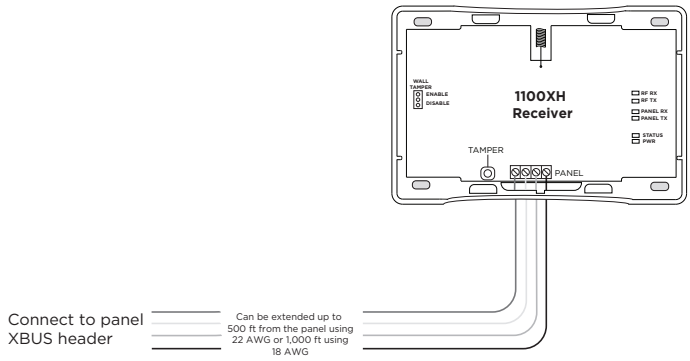

Figure 9: Wiring The 1100XH to the Panel

Select a Location for the Receiver

The receiver should be centrally located between the panel and the 1100 Series transmitters used in the installation based on the wiring specifications below. Use an 1106 Series Universal Wireless Transmitter to perform an LED survey.

1. With the cover removed, hold the transmitter in the desired location.
2. Press the tamper switch to send data to the panel and determine if communication is confirmed or faulty.

Confirmed: If communication is confirmed, for each press or release of the tamper switch, the LED blinks immediately on and immediately off. Repeat this test to confirm five separate consecutive LED blinks. Any indication otherwise means proper communication has not been established.

Faulty: If communication is faulty, the LED remains on for about 8 seconds or flashes multiple times in quick succession. Relocate the 1106 or wireless receiver until the LED confirms clear communication.

Mount the Receiver

1. Remove the cover from the plastic housing.
2. Use the included #6 screws to secure the 1100XH to the wall.
3. Use one of the provided screws to secure the wall tamper.

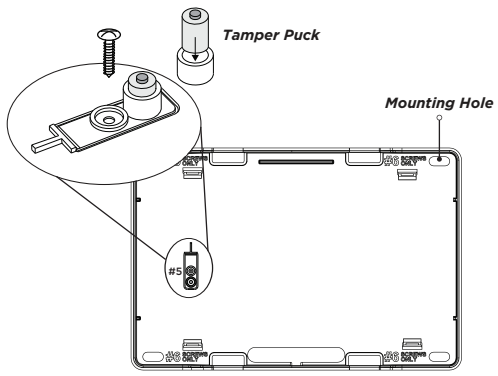

Figure 10: Inside of the 1100XH Housing

LX-Bus Expansion

LX-Bus

XT75 panels can provide zone and output expansion by connecting hardware modules to the LX-Bus header on the panel. XT75 panels are manufactured with one LX-Bus header labeled LX.

LX-Bus operation is compatible with hardwired zone and output expanders.
The LX-Bus provides up to 50 wired zones numbered 500-549 and up to 100 wireless zones numbered 500-599.

LX-Bus LEDs

The two LEDs, located above each LX-Bus header, indicate data transmission and receipt. The left LED flashes green to indicate the panel transmitting LX-Bus data. The right LED flashes yellow to indicate the panel is receiving LX-Bus data.

X-Bus Expansion

XT75 panels can provide a connection for the external 1100XH/1100XHE Wireless Receiver using the X-Bus header on the panel. XT75 panels are manufactured with one X-Bus header labeled X.

X-Bus LEDs

The two LEDs, located above each X-Bus header, indicate data transmission and receipt. The left LED flashes green to indicate the panel transmitting X-Bus data. The right LED flashes yellow to indicate the panel is receiving X-Bus data.

STEP 6: INSTALL WIRELESS KEYPADS

Mount the Keypads

DMP keypads have removable covers that allow the base to be mounted on a wall, desk stand or other flat surface using the screw holes provided on each corner.

Associate Wireless Keypads

Enable Wireless Keypad Association operation on both the keypad and panel. To enable association operation in the XT75 panel, reset the panel three times allowing the keypad bus transmit light to begin flashing between each reset.

For 60 seconds, the panel listens for wireless keypads that are in RF Survey and have not been programmed or associated into another panel. Wireless keypads are assigned to the first open device position in Device Setup automatically, based upon the order in which they are detected. The keypad logo turns Green to indicate it has been associated with the panel.

Note: A maximum of seven wireless keypads are allowed on each panel.

LCD Wireless Keypad

1. Press and hold the **Back Arrow key** and **CMD** until **SET BRIGHTNESS** displays.
2. Enter the code **3577** (INST) at the keypad and press **CMD**.
3. Press **KPD RF** to start the RF survey communication. The keypad displays its wireless serial number and **RF SURVEY**.

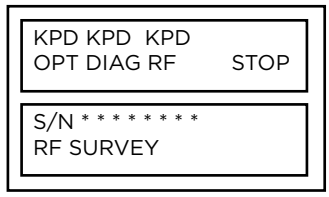

Figure 11: Keypad Screen Installer Options

Wireless Graphics Touchscreen Keypad

1. Access the **Options** menu through the carousel menu.
2. While in the **Options** display, press the **Installer Options** icon.
3. Enter the code **3577** (INST) at the keypad and press **CMD**.
4. Press **KPD RF** to start the RF survey communication. The keypad displays its wireless serial number and **RF SURVEY**.

Power/Armed LED

The keypad Power/Armed LED turns Red, indicating communication has not yet been established with the panel receiver. When successful communication has been established, the Power/Armed LED turns Blue on Graphics keypads or Green on LCD keypads.

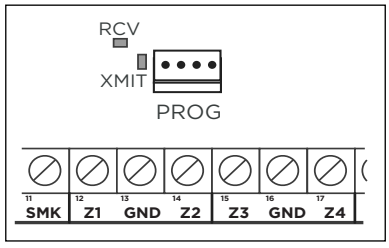

Figure 12: Transmit and Receive LEDs

STEP 7: PROGRAMMING

XT75 Programming Information

The information in this section enables you to quickly learn the programming options and operational capabilities of the XT75 Series panel. In addition to this guide, you should also be familiar with the XT75 User Guide (LT-2893) and the XT75 Compliance Listing Guide (LT-2895).

Internal Programmer

The panel contains all of its programming information in an on-board processor and does not require an external programmer. You can perform all programming tasks through a hardwired 32-character DMP alphanumeric keypad set to address one or through Dealer Admin (dealer.securecomwireless.com). This guide will focus primarily on programming from a hardwired keypad.

Getting Started

Before starting to program the panel, make sure the panel is properly grounded and AC and battery power is applied to the appropriate panel terminals. All wiring connections and grounding instructions are detailed in the Installation section.

User Menu

Several functions in the User Menu can be accessed from the keypad. The User Menu allows you to create user groups, add, change, and delete user codes, create favorites with your Z-Wave devices, and more. Before using a function, you will need to access the User Menu.

Accessing the User Menu

XT75 panels ship with a unique four-digit default master code that is used to access the user menu for the first time. This code can be modified or deleted. Use the Initialize Code option found in panel programming to revert the default code to 99. To access the User Menu:

1. Press the **CMD** key until MENU? NO YES displays.
2. Select **YES**. The keypad displays **ENTER CODE**. Enter your user code. You can now scroll down through the list of system features available to you.

Program the Panel

Note: If you enter **6653** (PROG) and **NO AUTHORITY** displays, ensure **SERVICE USER** is set to **YES** in the **USER MENU**.

Refer to the XT75 programming section as needed.

1. Set the reset jumper across the two **RESET** pins for two seconds.
2. Remove the reset jumper and place it over one pin for future use.
3. Enter the code **6653** (PROG). The keypad displays **PROGRAMMER**.
4. In **SYSTEM OPTIONS**, program a **HOUSE CODE** between 1 and 50.
5. At **BUILT IN 1100**, select **YES** if using the built-in wireless receiver on the XT75. Select **NO** to use the X-Bus Connection with the 1100XH Series Wireless Receiver on the XT75.
6. (1100XHE Only) At the 1**100 ENCRYPTION** prompt, select **ALL** to only add encrypted wireless devices to the system. Select **BOTH** to allow both encrypted non-encrypted wireless devices to be programmed.
7. The default passphrase appears at **ENTER PASSPHRASE**. Press **CMD** to keep the default. Press any select key or area to change the passphrase and enter an 8-character hexadecimal string (0-9, A-F).
8. Press **CMD** until **STOP** displays. Press a top row select key or area to save programming.

Programming Menu

You are now ready to start programming the XT75 panel. Pressing **CMD** scrolls you through the programming menu items listed below.

MENU ITEM	SECTION IN THIS MANUAL	MENU ITEM	SECTION IN THIS MANUAL
Initialization	2	Bell Options	19
Communication	3	Output Options	10
Network Options	4	Output Information	11
Device Setup	5	Area Information	12
Remote Options	6	Zone Information	13
System Reports	7	Stop	14
System Options	8	Set Lockout Code	15

To select a section for programming, press any select key or area when the name of that section displays on the keypad.

Reset Timeout

The XT75 has a feature that requires you to enter the Programmer within 30 minutes of resetting the panel. After 30 minutes, if you attempt to program by entering the **6653** (PROG) code, the keypad displays: **RESET PANEL**.

Keypads

Use a 32-character hardwired or wireless keypad to complete the panel programming. Programming cannot be accessed using an Icon Series keypad.

Special Keys

The following special keys or areas are common to all DMP keypads.

COMMAND (CMD) Key

Pressing **CMD** allows you to go forward through the programming menu and through each step of a programming section. As you go through the programming, the keypad display shows any current programming already stored in the panel memory. If no change is required for an option, press **CMD** to advance to the next step.

CMD is also used to enter information into the panel's memory. Press **CMD** after entering information.

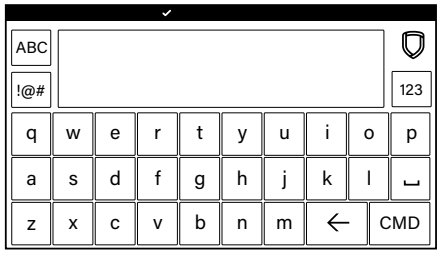

Back Arrow (<—) Key

Use the **Back Arrow** key to back up one step while programming. Press the **Back Arrow** key once to erase the last character entered.

Select Keys or Areas

The top row of keys are called the select keys on Thinline and Aqualite Keypads or select areas on Graphic Touchscreen Keypads.

During programming, the select keys or areas also allow you to change information currently in panel memory by pressing the appropriate select key or area under or on the display.

When there are more than four response options available, press **CMD** to display the next one to four options. Pressing the Back Arrow key allows you to review the previous four choices. Press any select key or touch the select area when the programming section name you want displays.

Entering Characters Using the Standard Keyboard

- Press **ABC** to access uppercase letters.
- Press **abc** to access lowercase letters.
- Press **!@#** to access symbols.
- Press **123** to access the Standard DMP Keypad.
- Keep in mind that not all keypad prompts accept letters and/or symbols.

Entering Characters Using the Number Pad

1. Choose a character from the table.
2. Identify the **Number** the character correlates with and press it on the keypad.
3. Identify the **Select Key** or **Area** for that character and press that select key or area on the keypad. To access the lowercase letter, press that select key or area again.
4. When the desired character displays on the keypad, return to Step 1 to enter another character or press **CMD** if finished.

NUMBER	SELECT KEY OR AREA			
	1	2	3	4
1	A	B	C	([{
2	D	E	F	)] }
3	G	H	I	! ^ ~
4	J	K	L	? “ |
5	M	N	O	/ \ `
6	P	Q	R	& $
7	S	T	U	@ %
8	V	W	X	, =
9	Y	Z	space, :	_ ;
0	- +	. '	* <	# >

Keypad Displays Current Programming

Each programming option displayed at the keypad shows the currently selected option in the panel memory. To change a programming option that requires a **NO** or **YES** response, press the select key or touch the select area for the response not selected.

For example, if the current option is selected as **YES** and you want to change it to **NO**, on Thinline or Aqualite keypads press the third top row select key. On Graphic Touchscreen Keypads, touch select area 3. The display changes to **NO**. Press **CMD** to display the next option.

Programmer Lockout Codes

Although the XT75 panels allow you to access the Programmer menu without a lockout code, it is recommended you program one to restrict programming access to authorized individuals only. You can do this by using **SET LOCKOUT CODE** at the end of the programming menu.

Installing a Lockout Code

1. After entering the Programmer menu, the keypad displays **PROGRAMMER**. Press **CMD** until **SET LOCKOUT CODE** is displayed (after **STOP**).
2. Press any select key or area. At the ENTER CODE: - display, enter a 1- to 5-digit programmer lockout code. Press **CMD**.
3. The displays shows **ENTER AGAIN**. Enter the same lockout code again and press **CMD**. The display shows **CODE CHANGED**. The new code number must now be entered before the Programmer menu can be accessed.

Lost Lockout Code Requires Factory Reset

The lockout code should be written down and kept in a secure place with access limited to authorized persons only. If you lose or forget the lockout code, the panel must be sent back to the factory to be reset.

Update Panel Firmware on Dealer Admin

Update the firmware through Dealer Admin.

1. Log in to Dealer Admin.
2. Find and select the customer name.
3. Select the system connected to the account. The **System Information** page opens.
4. Go to **Remote Update**.
5. Select **Update System** if there are updates available.

For more information about using Dealer Admin, refer to the Dealer Admin Help File.

INITIALIZATION

INITIALIZATION

Initialization

This function allows you to clear selected parts of the panel program back to the factory defaults.

INIT ALL? NO YES

Clear All Memory

NO leaves existing programming intact then displays Clear All Codes.

YES clears all memory then displays Reset Panel. Reset the panel by shorting the reset jumper and re-enter programming mode to continue.

CODES? NO YES

Clear All Codes

NO leaves existing codes intact.

YES clears the user code and user profile memory and assigns user code number 200 to the highest user number.

SCHEDS? NO YES

Clear All Schedules

NO leaves existing schedules intact.

YES clears all shift and output schedules.

EVENTS? NO YES

Clear Display Events Memory

NO leaves existing event memory intact.

YES clears the events memory.

ZONES? NO YES

Clear Zone Information

NO leaves existing zone information intact.

YES clears the zone information for all zones.

AREAS? NO YES

Clear Area Information

NO leaves existing area information intact.

YES clears the area information for all areas.

OUTPUTS? NO YES

Clear Output Information

NO leaves existing output information intact.

YES clears all programmed output names and any output cutoff assignment.

COM/RMT? NO YES

Clear Communication and Remote Options

NO leaves existing communication and remote options intact.

YES reset communication and remote options programming to factory defaults.

RMT KEY? NO YES

Initialize Remote Key

NO leaves existing remote key intact.
YES clears the remote key from the system.

WIFI? NO YES

Clear Wi-Fi

NO leaves existing Wi-Fi programming intact.

YES reset Wi-Fi programming to factory defaults.

DEFAULTS NO YES

Set to Factory Defaults

NO leaves existing panel programming intact.

YES sets the panel's programming back to factory default selections and clears all Favorites, Device Setup, System Options, and Remote Options programming from the panel. Selecting YES does not clear the panel's event memory, zone, user code information, or schedules.

COMMUNICATION

COMMUNICATION

Communication

Configure the communication options for the panel. The information you program varies with the Communication Type you select.

ACCOUNT NO: **12345**

Account Number

The Account Number is a 1 to 5 digit number used to identify which panel is sending a message. Enter the account number sent to the SCS-1R or SCS-VR Receiver. The default is **12345**.

The range of valid account numbers for a panel is 1 to 65535. For accounts of four digits or less, do not enter leading zeros.

XMIT DELAY: **30**

Transmit Delay

Enter the number of seconds (15 to 45) the panel waits before sending burglary zone (Night, Day, or Exit) reports to the receiver. Other zone type reports are sent immediately. Alarm bells and relay outputs are not delayed during this period. Program Burglary Outputs for pulsed or steady, and set Abort Reports to YES if Opening and Closing reports are not being sent. Enter 0 (zero) to disable this function. The default is **30**.

If the area where the alarm occurred is disarmed during the Transmit Delay time, only an Abort Report (S45) message is sent to the receiver. If the area where the alarm occurred is disarmed after the alarm message is sent to the receiver but before the Bell Cutoff time expires even if the alarm was silenced, an Alarm Cancelled (S49) message is sent. Otherwise the alarm is sent at the end of the delay.

PATH: **-**

Communication Path

Up to four communication paths may be programmed. Each path is designated as a primary or backup communication route. Path 1 is always Primary but other paths may be programmed as additional primary or backup.

Each primary path establishes a new path group. A path group is made up of the primary path and its subsequent backup paths. Typical communication takes place on the primary path with backup paths being used only when the primary path fails or when the backup path is programmed to duplicate messages. There is no option to backup path 4.

COMM TYPE: **NONE**

NONE NET CELL WIFI

Communication Type

Specifies the communication method the panel uses on this path to report system events to DMP SCS-1R or SCS-VR Receivers. Default is **NONE** for Path 1-4.

NONE - For local systems. Selecting NONE ends communication programming.

NET - Network communication using the panel onboard network connection. The DMP Network/Output reporting format is transmitted over a data network to the SCS-1R or SCS-VR Receiver.

CELL - This option allows communication over the cellular network.

WIFI - Network communication to DMP Model SCS-1R or SCS-VR Receivers.

PATH TYPE: **BACKUP**
PRIMARY BACKUP

Path Type

The Path Type defines if the path is Primary or Backup. Because Path 1 is Primary, this option only displays for paths 2-4. Default is **BACKUP**.

If the Primary Communication Type is CELL, then the backup Communication Type can only be NET.

TEST RPT: **YES**
NO **YES** DEFER

Test Report

Test Report determines if test reports (Automatic Recall Test OK or Unrestored System) are sent on this path. Reports are sent according to the programming in Test Frequency and Test Time. Default is **YES**.

Select **YES** to allow the programmed test report to be sent on the path currently being programmed.

Select **DEFER** to not send a test report if the panel communicates any message to the receiver within the time set in Test Frequency.

Select **NO** to not send test reports on this path.

TEST FREQ: **1 DY**

Test Frequency

Test Frequency determines the frequency of the test report. Enter a number from 1 to 60 and select DY (Day) or HR (Hour) by pressing the far right select key or area. Default is **1 Day**.

TEST TIME: **0:00 AM**

Test Time

Use this option to select the time of day for Test Reports. Select the hour, minute and AM/PM. Enter 0:00 AM to disable this feature. Default is **0:00 AM**.

CHECKIN MINS: **200**

Check In

Enter the number of minutes between check-in reports, from 2 to 240 for NET or 4 to 240 for CELL, when the panel is armed or disarmed. For CELL the default is **0**. For NET and WIFI the default is **200**.

FAIL MINS: **240**

Fail Time

This option displays if CHECKIN is set to YES. Entering a FAIL TIME allows the receiver to miss multiple check-ins before logging that the panel is missing. The maximum fail time is 240 minutes. For example, if CHECKIN is 10 and FAIL TIME is 30, the receiver only indicates a Panel Not Responding after 30 minutes. The FAIL TIME must be equal to or greater than the CHECKIN time. Default is equal to **CHECKIN** for CELL. Default is **240** for NET.

ENCRYPT NO **YES**

Encryption

This option displays if the Communication Type is NET or CELL. Select **YES** to enable 128-bit encryption level for the path currently being programmed. Default is **NO**.

Encryption will require the monitoring center's Passphrase to be entered in Network Options under Passphrase.

RECEIVER IP
000.000.000

Receiver IP

This option displays if the Communication Type is NET or CELL. Enter the Receiver IP address where the panel sends network messages. The Receiver IP Address must be unique and cannot be duplicated on the network. Enter all 12 digits and leave out the periods.

For example, enter IP address 192.168.0.250 as 192168000250. The periods display automatically.

RECEIVER PORT **2001**

Receiver Port

Enter the receiver port number. Valid range is 1 to 65,535. Default is **2001**.

ADVANCED? NO YES

Advanced Programming

Select **YES** to enter the Advanced Programming menu for the communication path currently being programmed. Selecting **NO** ends programming of the current communication path and takes users back to the Communication Path option to program a secondary path.

APN
SECURECOM400

APN

Enter the APN (Access Point Name). This allows an access point for cellular communication and is used to connect to a DNS network. The APN may contain two lines of 16 characters to equal 32 characters. Default is set to **SECURECOM400**.

FAIL TEST HRS: **0**

Fail Test Frequency

This option sets the frequency for a Backup or Adaptive path to send a test report when the closest previous path fails within its path group.

If Fail Test Frequency is set to 0, test reports are sent only according to Test Report programming. Range is 0 to 24 hours. Default is **0**.

ALARM **YES**

Alarm Reports

This option displays for Primary paths. All backup paths within the group follow the same programming for Alarm Reports. Default is **YES**.

When YES is selected, the following reports are sent to the receiver for all zone types:

- Alarm
- Bypass
- Reset
- Restore

NO **YES** FIRE

When FIRE is selected, the following reports are sent for Fire, Fire Verify and Supervisory Zones:

- Alarm
- Bypass
- Reset
- Restore

SPV/TRBL **YES**

Supervisory/Trouble Reports

This option displays when the Path Type is Primary. All backup paths within the group follow the same programming for Supervisory/Trouble Reports. Default is **YES**.

NO **YES** FIRE

When YES is selected, the following reports are sent for all zone types:

- Trouble
- Low Battery
- Missing
- Fault
- Restorals
- System Troubles
- System Restoral

When FIRE is selected, the following reports are sent for Fire, Fire Verify, and Supervisory Zones:

- Trouble
- Low Battery
- Missing
- Fault
- Restorals
- System Troubles
- System Restoral

Serviceman reports are sent regardless of the selection made for Supervisory/Trouble reports.

O/C USER NO **YES**

Opening/Closing and User Reports

This option displays when the Path Type is Primary. All backup paths within the group follow the same programming for Opening/Closing and User Reports. Default is **YES**.

When YES is selected, the following reports by user are sent to this receiver.

- Opening
- Closing
- Bypass
- Reset
- Code changes (including adding, deleting, changing)
- Schedule changes (temporary, permanent, shift)
- Holiday date changes

DOOR ACS **DENY**

NO YES **DENY**

Door Access Report

This option displays when the Path Type is Primary. All backup paths within the group follow the same programming for Door Access Reports. Default is DENY.

Select **YES** to enable Door Access Granted and Denied reports to this receiver whenever a door access is granted to a user. The Door Access Granted report is only sent if the keypad number has also been selected in Access Keypads under the SYSTEM REPORTS programming.

Select **DENY** to enable Door Access Denied reports only to this receiver when a door access is denied to a user.

SEND COMM TRBL:
NO **YES**

Send Communication Trouble

This option displays for each path and determines if and how communication trouble on the path is sent to the receiver. A trouble message indicates both the path number and communication type that failed. Default is **YES**.

SEND PATH INFO:
NO YES

Send Path Information

This option displays for each path and if YES, each panel message includes path information such as path number, communication type, and path type. Default is **NO**.

NETWORK OPTIONS

Network Options are provided to define the network configuration for the panel. This information will be used during communication of messages via network. If the panel is set to the Network communication type, the onboard hardwired Ethernet connection is required in order to send alarm signal communication. If the panel is set to the Wi-Fi communication type, the 763 Wi-Fi Module is required in order to send alarm signal communication.

IP addresses and port numbers may need to be assigned by the network administrator. When entering an IP, Gateway, or Subnet Mask address be sure to enter all 12 digits and leave out the periods.

NETWORK OPTIONS

Network Options

This option is for configuring the desired network settings. Press any select key or area to select.

WIFI SETUP
WPS LIST MANUAL

WIFI SETUP
TEST

Wi-Fi Setup

This option is for connecting to the desired Wi-Fi network and displays only when Comm Type is set to Wi-Fi. Press any select key or area to select.

WPS - Automatically connects to a WPS enabled router.
LIST - Displays the names and signal strength of any Wi-Fi routers in range.
MANUAL - Enter the name of the Wi-Fi router you wish to connect to.
TEST - Verifies connection of your system to the Wi-Fi network.

SEARCHING

WPS

When **WPS** is selected, SEARCHING displays. Press the WPS button on the Wi-Fi network router to which you are attempting to connect. SEARCHING displays for up to two minutes or until connected to the WPS enabled router. Refer to the router's instruction manual for sending a security key to the XT75 Series panel.

If the panel fails to connect to the WPS enabled router, WPS FAILED RETRY? NO YES displays. Press the fourth select key or area to RETRY or press the third select key or area to display WPS LIST MANUAL.

WPS LIST MANUAL
SEARCHING

SIGNAL XXXXXX
NET12345

List

When **LIST** is selected, SEARCHING displays until any Wi-Fi networks are found in range. Once available Wi-Fi networks are found the keypad displays the name of the SSID (Wi-Fi Network name) and signal strength of each network. Press **CMD** to scroll through the list of available Wi-Fi networks. When the desired network is displayed, press any select key or area to connect.

WPS LIST MANUAL

WIFI SETUP
ENTER SSID

Manual

When **MANUAL** is selected, the current settings display. **SecureCom** is the default.

Enter up to 32 characters for the SSID from the network router to identify the network LAN. Use the chart below to enter lowercase or special characters. Each successive press of the select key or area gives additional options.

KEY NUMBER	SELECT KEY OR AREA 1	SELECT KEY OR AREA 2	SELECT KEY OR AREA 3	SELECT KEY OR AREA 4
1	A, a,	B, b	C, c	(, [, {
2	D, d	E, e	F, f	),], }
3	G, g	H, h	I, i	!, ^, ~
4	J, j	K, k	L, l	?, ", |
5	M, m	N, n	O, o	/, \, `
6	P, p	Q, q	R, r	&, $
7	S, s	T, t	U, u	@, %
8	V, v	W, w	X, x	, =
9	Y, y	Z, z	space, :	_, ;
0	-, +	., '	*, <	#, >

```
SSID
   SSID FOUND
```

Once the SSID is entered, press **CMD** and SEARCHING displays. The keypad displays SSID FOUND or SSID NOT FOUND. When the SSID is found, the security type is also detected.

```
SSID
   SSID NOT FOUND
```

If the 763 is unable to connect to the desired network and SSID NOT FOUND displays, press **CMD** to return to the main menu and WPS LIST MANUAL displays. Press **CMD** again to display TEST.

```
TEST
```

Test
Press the first select key or area to select TEST and the 763 Wi-Fi module will attempt to verify connection of your system to the selected Wi-Fi network.

```
W/L SECURITY
WPA-PSK
```

Wireless Security Type

When successful, W/L SECURITY displays. Select the security type based on the network router programming. The default network security type is WPA-PSK. Press any select key or area to display the other security options. The available options are WEP, WPA, and NONE.

```
W/L SECURITY
WEP   WPA   NONE
```

Press the first select key or area to choose WEP, press the second select key or area for WPA, press the third select key or area for NONE.

```
W/L KEY
****************
```

Wireless Network Key

This option displays only if Comm Type is set to Wi-Fi and Wireless Security Type is anything other than NONE. When connecting to the Wi-Fi network the panel also detects the security type in use and W/L KEY: ********** displays.

Enter the key provided from the network router's programming.

WEP requires a network password of 10 characters (WEP64) or 26 characters (WEP128), using a combination of the number 0-9 and the letters A-F.

WPA/WPA-PSK uses a custom key that allows 8 to 32 characters.

Enter the W/L KEY and the panel performs a connection test and CONNECTING displays. When successful, CONNECTED displays on the keypad. If the panel does not connect to the Wi-Fi network, NOT CONNECTED displays. Press **CMD** to return to the Wi-Fi SETUP main screen.

Depending on the security type, the key might take several seconds to process.

```
DHCP        NO   YES
```

DHCP

If the panel uses a dynamic IP address select YES. When set to YES, the panel operates using DHCP and does not use the Local IP Address number. When the DHCP option is set to NO, the panel uses the IP address entered in Local IP Address. The default value for DHCP mode is **YES**.

```
LOCAL IP ADDRESS
      192 .168.0.250
```

Local IP Address

Enter the local IP address for the panel. The Local IP Address must be unique and cannot be duplicated. The default local IP address is **192.168.0.250**.

```
GATEWAY ADDRESS
      192 .168.001.001
```

Gateway Address

Enter the local gateway address. The Gateway IP Address is needed to exit your local network. The default gateway address is **192.168.001.001**.

```
SUBNET MASK
      255.255.255.000
```

Subnet Mask

Enter the local subnet mask assigned to the panel. The default subnet mask address is **255.255.255.000**.

```
DNS SERVER
      192.168.0.1
```

DNS Server

Enter the IP address of the DNS (Domain Name System) used by the panel to resolve domain names into IP addresses. The default address is **192.168.0.1**.

On systems with hardwired network connection, the DNS address can be changed even if the panel has DHCP enabled.

PASSPHRASE
-

SCS Passphrase

To enable encryption, type an 8 to 16-character Passphrase using alphanumeric characters. If you leave the Passphrase blank, the panel communicates with the SCS-1R Receiver, but the data is not encrypted. The Passphrase is blank by default.

An XT75 panel with encryption is capable of communicating 128-bit encrypted data to an SCS-104 line card installed at the receiver. The XT75 panel with encryption and the receiver SCS-104 line card must have the same password called a Passphrase.

PORT: **2002**

734N Listen Port

Enter the port number that the 734N/734N-POE/7463/8860 will use to send communication to the panel. This must be the same port that is programmed in Panel IP Port within the 734N/734N-POE/7463/8660 Communication programming menu.

Note: The 734N Listen Port cannot be the same as the panel network programming port.

734N PASSPHRASE
-

734N Passphrase

Enter an 8 to 16-character Passphrase to encrypt communication with the 734N/734N-POE module. The 734N Passphrase must match the 734N Passphrase entered in Communication programming of the 734N. The Passphrase is **blank** by default. A passphrase is required for operation.

DEVICE SETUP

DEVICE SETUP

Device Setup
This section allows you to define the panels physical configuration. You can install and address up to 8 supervised devices on the keypad bus. Devices can also be added to the LX-Bus. Programmable devices are Keypad, Door, Fire, Expander, and 1100T.

CARD FORMATS

Card Formats
Enter the Card Formats menu.

CARD FORMATS
FORMAT NO: X

Format Number
Enter a format number to program. Valid format number range is 1-8. Press **CMD**.

UNUSED

Format Name
A format name must be given to each device in the system. To add a format name, press any select key or area to enter a new name up to 32 alphanumeric characters. Press **CMD**.

To remove a format from the system, delete the format name by pressing any select key or area, then press **CMD**. The panel automatically programs the name as * UNUSED *.

WIEGAND CODE
LENGTH: **26**

Wiegand Code Length
When using a custom credential, enter the total number of bits to be received in Wiegand code including parity bits. Press any select key or area to enter a number between 1-255 to equal the number of bits. Default is **26 bits**.

The starting position location and code length must be determined and programmed into the 734/734N/734N-POE Module.

SITE CODE
POSITION: **1**

Site Code Position
Enter the site code start position in the data string. Press any select key or area to enter a number between 0-255. Default is **1**.

SITE CODE
LENGTH: **8**

Site Code Length
Enter the number of characters the site code contains. Press any select key or area to enter a number between 1-24. Default is **8**.

USER CODE
POSITION: **9**

User Code Position
Define the User Code start bit position. Press any select key or area to enter a number between 0-255. Default is **9**.

USER CODE
LENGTH: **16**

User Code Length
Define the number of User Code bits. Press any select key or area to enter a number between 16-64. The default is **16**.

REQUIRE SITE
CODE: NO YES

Require Site Code
Press the select key or area under **YES** to use a site code.

In addition to User Code verification, door access is only granted when any one site code programmed at the SITE CODE ENTRY option matches the site code received in the Wiegand string.

SITE CODE 1: -

Site Code Display
Program up to 8 eight-digit site codes. Site code range is 0-16,777,214. Any previously programmed site codes display. Dashes represent blank site codes. Default is **blank**.

NO. OF USER CODE DIGITS **5**

Number of User Code Digits

Program user codes from 4-12 digits in length. Press any select key or area to enter a user code digit length. This number must match the user code number length being used by the panel. Default is **5**.

Any selection above 5 digits require entry of the custom card definitions with custom site and user code positions for the Wiegand string. When searching the bit string for the user code, the digits are identified and read from left to right.

DEVICE NO: -

Device Number

Enter the address of the device you are programming. After you program each option for the first device, repeat these programming steps for each additional device.

Programmable devices on the keypad bus are KEYPAD, DOOR, FIRE, EXPANDER, and 1100T. The available addresses on the keypad bus are 1 - 8.

Programmable devices on the LX-Bus are FIRE and EXPANDER. The available addresses on the LX-Bus are 500-549 for wired and 500-599 for wireless.

KEYPAD BUS	
Device/Door	**Zones**
1	11-14
2	21-24
3	31-34
4	41-44
5	51-54
6	61-64
7	71-74
8	81-85

* UNUSED *

Device Name

A device name must be given to each device in the system. To add a device name, press any select key or area to enter a new name up to 32 alphanumeric characters. Press **CMD**.

To remove a device from the system, delete the device name by pressing any select key or area, then press **CMD**. The panel automatically programs the name as * UNUSED *.

TYPE: **KEYPAD**
DOOR KPD EXP TLR

Device Type

This section allows you to select a device type for the selected device number.

DOOR - The device is an access control device and is either a keypad using door strike functions or a Access Control Module. Devices with an address higher than 16 are automatically assigned as a DOOR device type.

KEYPAD - The device type is a non-fire, non-access keypad.

EXPANDER - A Zone Expansion Module.

TLR - 1100T DMP Translator (Keypad Addresses Only)

1100T? **NO** YES

1100T

The 1100T allows you to use compatible non-DMP (competitor) wireless with an XT75 Series panel.

SERIAL #: XXXXXXXX

Enter the 1100T serial number and press **CMD**.

1100T FREQ:
HWL 2GIG INT DSC

Communication frequencies are HWL (Honeywell), 2GIG, INT (Interlogix), and DSC. Default is **HWL** (Honeywell).

DISPLAY AREAS

Display Areas

Press CMD to program Display Areas. To select an area, enter the area number using the keypad digit keys. When an area is selected, an asterisk appears next to the area number. Enter the number again to deselect the area. Press CMD to display the next set of areas. Default is all area numbers.

Display Areas allows the panels burglary activities to be segmented so that only specific area(s) and their associated operation appear at a particular keypad. Area number(s) selected in this field affect the way users interact with the system from this particular device. This allows specific area control from specific keypads, as well as annunciation of zones assigned to those area(s).

When Display Areas is left defaulted (all areas selected), Menu Display and Status List items determine whether zone alarms and troubles display at this device, regardless of area assignment. Also, all system areas may be armed and disarmed from this device.

For an All/Perimeter or Home/Sleep/Away system, Display Areas should be left at factory default settings.

Device Communication Type

DEVICE COMM TYPE
KPD-BUS

DEVICE COMM TYPE
KPD WLS NET

KEYPAD - Select **KPD** for devices that are connected to the keypad bus.

WIRELESS - Select **WLS** for wireless communication.

NETWORK - Select **NET** for devices that communicate over a network connection.

PANEL COMMUNICATION TYPE	AVAILABLE NETWORK KEYPADS (INCLUDING WI-FI KEYPADS)
Hardwired Network	7 network keypads
Wi-Fi Only (763 Module)	0 network keypads

Note: You can only enter panel programming or disable the **Programming Port** on a hardwired keypad when connected to the keypad bus of an XT75 Control Panel.

SERIAL #:XXXXXXXX

Serial Number

This option only displays if Device Type is KEYPAD and Device Comm Type is WIRELESS.

Enter the eight-digit serial number found on the wireless keypad.

SUPERVSN TIME: **240**

SELECT MINUTES:
0 60 240

Supervision Time

This option only displays if Device Type is KEYPAD and Device Comm Type is WIRELESS.

Press any select key or area to select the supervision time required for the device. Press CMD to accept the default time. Default is **240 minutes**.

Press the select key or area under the required number of minutes. The device must check in at least once during this time or a missing condition is indicated for that device. Zero (0) indicates an unsupervised wireless keypad.

STRIKE TIME: **5**

Strike Time

Enter a door access time, between 1 and 250 seconds, during which a keypad or access control device relay is activated. Magnetic locks or electric door strikes are connected to the relay and released for the length of the strike time. Default is **5 seconds**.

Enter **0** (zero) to activate the device relay with a toggle action. This allows the user to activate **or** deactivate the device relay each time a valid user code is entered. The device relay is activated **or** deactivated until a user code is entered again.

STRIKE DELAY: **0**

Strike Delay

Enter the number of minutes, 0 to 9, to delay a door strike after a valid code is entered or a card read occurs. When a valid code or card read is received, the activation of the door strike is delayed for the number of minutes programmed. The standard door strike message is sent to the Central Station receiver. During this delay, all subsequent codes entered or cards presented to the reader for a door strike are ignored and no record of the attempt is stored. Enter 0 (zero) to disable. Default is **0 (zero)**.

FIRE EXIT **NO** YES

Fire Exit Release

Select **YES** to allow the door access relay at this address to be released whenever Fire panic keys are pressed or a Fire or Fire Verify zone alarm is in the Status List. The relay is reset whenever a Sensor Reset is performed to remove all Fire and Fire Verify zone alarms from the Status List. Select **NO** to not allow the door access relay at this address to be released.

PUBLIC DR **NO** YES

Public Door

Select **YES** to allow this device to be sent a lock command whenever the Lockdown command is issued from the Keypad User Menu, correctly configured Panic Zone or Holdup Zone, or remote command.

Select **NO** to not send a lock command to this device whenever the Lockdown command is issued. Default is **NO**.

OVERRIDE **NO** YES

Schedule Override

Select **YES** to allow the schedule to be overriden by the armed condition of the system. This causes the on time for a door schedule to be ignored when all areas assigned to Display Areas for this device are armed. Should any area become disarmed after the door schedule on time, the device output turns on. A door output which is on during a disarmed period automatically turns off when all Display Areas assigned to the device become armed, even if the scheduled off time has not been reached. This feature can be used to keep doors locked when a factory opens late, or is forced to close early, due to a snow storm or other cause.

Select **NO** to allow door schedules to operate independent of system armed status.

When **OVERRIDE** is **YES** and there are no areas programmed in **DISPLAY AREAS**, the door schedule for that device does not work. Either set **OVERRIDE** to **NO** or enter an area number in **DISPLAY AREAS**.

DOOR REAL-TIME STATUS? **NO** YES

Door Real-Time Status

Select **YES** to have real-time door status messages sent to the PC Log, Entré, and Dealer Admin accounts that are reporting for this device. Messages are sent anytime the panel turns the door relay on or off. Default is **NO**.

SEND DOOR FORCED MESSAGE? **NO** YES

Send Door Forced

Select **YES** to have the panel send a real-time door status message of Forced Open (FO) to PC Log reporting, Entré reporting, and Dealer Admin reporting when the door relay is off, but the door zone has transitioned from its normal state. Default is **NO**.

PROGRAM 734 OPTIONS? **NO** YES

Program 734 Options

Select **YES** to program a 734 or a 734N/734N-POE Access Control Module. The options displayed for a 734 or 734N are the same.

To program the 734, the Device Type must be set to DOOR and the Device Communication Type must be set to KPD-BUS.

To program the 734N/734N-POE, the Device Type must be set to DOOR and the Device Communication Type must be set to NETWORK.

ACTIVATE ZONE 2
BYPASS? **NO** YES

Activate Zone 2 Bypass

Select **YES** to activate the Bypass option.

Selecting **NO** allows standard zone operation on Zone 2 and displays the ACTIVATE ZONE 3 REX option. Default setting is **NO**.

If the door being released by the 734/734N/734N-POE module is protected (contact installed), you can provide a programmable Bypass entry/exit timer by connecting its contact wiring to the 734/734N/734N-POE module Zone 2. When the on-board Form C relay activates and the user opens the door connected to Zone 2, the zone is bypassed for the number of seconds programmed in ZONE 2 BYPASS TIME allowing the user to enter/exit.

If Zone 2 does not restore (door closed) within the programmed bypass time, the 734/734N/734N-POE piezo pulses during the last ten seconds. If Zone 2 restores prior to the end of the programmed time, the piezo silences. If the zone does not restore before the programmed time, the 734/734N/734N-POE ends the bypass and indicates the open or short zone condition to the panel.

ZONE 2 BYPASS
TIME: **40**

Zone 2 Bypass Time

Enter the number of Bypass seconds to elapse before the Bypass timer expires. Range is from 20 to 250 seconds. Press any select key or area to enter the number of seconds. If the door remains open when the timer expires a zone open/short is sent to the panel for Zone 2. The default is **40 seconds**.

RELOCK ON ZONE 2
CHANGE? **NO** YES

Relock on Zone 2 Change

Select **NO** to leave the relay on for the door access time when Zone 2 restores. Select **YES** to turn the 734/734N/734N-POE relay off and relocks the door when Zone 2 changes state. The default is **NO**.

ACTIVATE ZONE 3
REX? **NO** YES

Activate Zone 3 Request to Exit

Selecting **YES** activates the Zone 3 Request to Exit (REX) option.

Selecting **NO** allows standard zone operation on Zone 3 and displays the ACTIVATE ONBOARD SPEAKER option. Default setting is **NO**.

Optionally connect a PIR (or other motion sensing device) or a mechanical switch to Zone 3 to provide REX capability to the system. When Zone 3 shorts, the on-board Form C relay activates for the programmed number of seconds. During this time, the user can open the protected door to start the programmed Bypass entry/exit timer. After the programmed number of seconds, the relay restores the door to its locked state.

The 734/734N/734N-POE module provides a bypass-only option for REX on Zone 3. When Zone 3 opens from a normal state, only a bypass occurs: the on-board relay does not activate. This bypass-only option uses two methods of REX. The first REX device provides the programmed Bypass entry/exit timer. The second REX device, or manual device such as a door knob, unlocks the door.

An example of the bypass-only configuration is a door to an office that is locked 24 hours a day. Users pass a REX motion detector positioned by the door to begin the programmed exit timer. Within the programmed number of seconds the user must then manually activate a second device, such as a REX device or manual door knob, to unlock the door. If the door is opened after the programmed number of seconds, the zone goes into alarm.

ZN 3 REX STRIKE
TIME: **5**

Zone 3 REX Strike Time

Enter the number of REX seconds to elapse. Range is from 5 to 250 seconds. Press any select key or area to enter the number of seconds. The default is **5 seconds**.

ACTIVATE ONBOARD
SPEAKER? **NO** YES

Activate Onboard Speaker

Select **YES** to enable the onboard piezo speaker for local annunciation. Select **NO** to turn the piezo off for all operations. This does not affect remote annunciator open collector (RA) operation. The default is **NO**.

CARD OPTIONS
DMP CUSTOM ANY

Card Options

Select **DMP** to allow only the DMP card format for access. The menu advances to REQUIRE SITE CODE.

Select **CUSTOM** to disable DMP format and program slots 1-8 as needed. The format that is programmed into slot 1 is the default format. In the event that a card with an unrecognized format is programmed when adding a credential, that card will be read in the format that is programmed in slot 1. To restrict card reads to specific formats, only program slots 2-8.

Select **ANY** to allow all Wiegand card reads to activate the door strike relay. The relay is activated for the length of time programmed in ZN 3 REX TIME. No user code information is sent to the panel. The menu advances to NO COMM WITH PNL.

NO COMM WITH PNL
OFF SITE ANY ON

No Communication with Panel

This option defines the relay action when communication with the panel has not occurred for approximately ten seconds. Press any select key or area to display relay action options. Press the Back Arrow key to return to the NO OF USER CODE DIGITS:.

Choose the action required:

NO COMM WITH PNL
OFF

Press the first select key or area to choose **OFF** (Relay Always Off) — The relay does not turn on when any Wiegand string is received. Off does not affect any REX operation. The default option is **OFF**.

NO COMM WITH PNL
SITE

Press the second select key or area to choose **SITE** (Accept Site Code) — Door access is granted when the Wiegand site code string received matches any site code programmed at SITE CODE ENTRY. For details refer back to the REQUIRE SITE CODE option.

NO COMM WITH PNL
ANY

Press the third select key or area to choose **ANY** (Any Wiegand Read) — Door access is granted when any Wiegand string is received.

NO COMM WITH PNL
ON

Press the fourth select key or area to choose **ON** (Relay Always On) — The relay is always on. Press **CMD** to display the next action.

NO COMM WITH PNL
LAST

Press the first select key or area to choose **LAST** (Keep Last State) — The relay remains in the same state and does not change when communication is lost.

After choosing the action, the **NO COMM WITH PNL** option and the newly defined action display. Programming is now complete. Press **CMD** to display DEVICE NO.

REMOTE OPTIONS

REMOTE OPTIONS

Remote Options

This section allows you to enter the information needed for Remote Command/ Remote Programming operation.

REMOTE KEY

Remote Key

This option allows you to use a remote key to connect to Dealer Admin or Remote Link. Dealer Admin or Remote Link automatically connects to the panel using the default key to allow remote functionality. You can change the current key and enter a new key of up to 16 characters. The key should be the same in Dealer Admin or Remote Link and in the panel when entered at the keypad.

To enter a remote key or change the current one, press a select key or area and enter any combination of up to 16 digits. Press **CMD**. The current key displays as asterisks.

APP KEY:

App Key (For EASYconnect)

Enter the 8-digit App Key obtained in your Dealer Settings tab at dealer.securecomwireless.com.

This communication option is only available for XT panels with onboard network and is used to eliminate the need for a static IP address programmed in Network Options.

To enter a new App Key, press any select key or area and enter any combination of 8 digits.

Press **CMD**. The default for this option is blank.

REMOTE DISARM?
NO **YES**

Remote Disarm

Select **YES** to enable the panel to be disarmed remotely. Select **NO** to disable remote disarming. Default is **YES**.

CELL APN:
SECURECOM400

APN

Enter the APN (Access Point Name). This allows an access point for cellular communication and is used to connect to a DNS network. The APN may contain two lines of 16 characters to equal 32 characters. Default is set to SECURECOM400.

Press **CMD**. The default for this option is **blank**.

INTEGRATOR
CONNECTION: **NONE**

Integrator Connection

This option displays if the panel has network capability. The default is **NONE**.

Select **NET** to allow a dedicated network connection with the integrator.

Select **NONE** to not enable this option.

INTGRTR INCOMING
TCP PORT: **8011**

Integrator Incoming TCP Port

This option displays only if NET is chosen for the integrator connection. Enter the programming port number for the incoming connection. The programming port identifies the port used to communicate messages to and from the integrator software. This port cannot be the same port as programmed in Network Programming Port. The default Programming Port setting is **8011**.

INTEGRATOR IP
000.000.000.000

Integrator IP Address

This option displays only if NET is chosen for the integrator connection. Enter the integrator IP address where the panel sends network messages. The integrator IP Address should be unique and cannot be duplicated on the network. The periods display automatically. Default is **0.0.0.0.**

INTGRTR OUTBOUND
TCP PORT: **8001**

Integrator Outbound TCP Port

This option displays only if NET is chosen for the integrator connection. Enter the programming port number for the outbound connection. The programming port identifies the port used to communicate messages to the integrator software. Default is **8001**.

INTGRTR BACKUP IP
NONE NET CELL

Integrator Backup Connection

This option displays if NET or CELL is chosen for the integrator connection. Enter the backup address where the panel sends network messages if the first integrator connection fails. The connection should be unique and cannot be duplicated on the network. If the backup connection is NET, enter all 12 digits and leave out the periods. For example, enter IP address 192.168.0.250 as 192168000250. The periods display automatically. Default is **0.0.0.0.**

INTGRTR BACKUP IP:
-

Integrator Backup IP Address

This option displays only if NET is chosen for the Integrator connection, and Use Integrator Host Name is NO. Enter the Integrator Backup IP address where the panel sends network messages if the first Integrator IP Address fails. The Integrator Backup IP Address should be unique and cannot be duplicated on the network. Enter all 12 digits and leave out the periods. For example, enter IP address 192.168.0.250 as 192168000250. The periods display automatically.

ARM/DIS **NO** YES

Arm and Disarm Reports

Select **YES** to allow the panel to send arming, disarming and Late to Close events, including the area number, name and action, the user number and name, and the time and date. Default is **NO**.

ZONE: **NO** YES

Zone Reports

Select **YES** to allow the panel to send changes in the status of active zones, including the zone number, name, type, the action (alarm, trouble, bypass, etc.), user number (if applicable), and area name. If performing a Walk Test, Zone Verify and Zone Fail messages are sent for each zone. Default is **NO**.

USR CMDS: **NO** YES

User Command Reports

Select **YES** to allow the panel to send user code changes, schedule changes, and door access denied events. Default is **NO**.

DOOR ACS: **NO** YES

Door Access Reports

Select **YES** to allow the panel to send door access activity: door number, user number and name, and time and date. Default is **NO**.

SUPV MSG: **NO** YES

Supervisory Reports

Select **YES** to allow the panel to send system monitor reports, such as AC and battery, and system event reports. Supervisory Reports also sends the following reports:

- Abort
- Exit Error
- Ambush
- System Recently Armed
- Alarm Bell Silenced
- Unauthorized Entry
- Late to Close

Note: Late to Close is only sent as a Supervisory Report if **Area Schedules** is not enabled, **Closing Check** is enabled, and an opening/closing schedule has been programmed.

To send these reports to the PC Log, enable **SUPV MSG**.

INTGRTR PASSPHRASE
-

Integrator Passphrase

To enable encryption, enter an 8 to 16-character Passphrase using alphanumeric characters. If you leave the passphrase blank, the panel communicates with the integrator but the data is not encrypted. The passphrase is **blank** by default.

VIDEO: **NO** YES

Video Reports

Select **YES** to allow the panel to send video system reports to Entré when an event message has been received from a camera. Default is **NO**.

SYSTEM REPORTS

SYSTEM REPORTS

System Reports

This function allows you to select the reports the XT75 sends to the receiver.

ABORT **NO** YES

Abort Reports

YES allows the panel to send an Alarm Abort Report to the receiver any time an area is disarmed during Transmit Delay before an alarm report is sent and the Bell Cutoff Time has not expired. The area must be disarmed and no alarmed zones can still be armed.

YES also allows a Bell Silenced Report to be sent if the alarm bell is silenced with a valid user code during an alarm, if the communication type is not CID. Default is **NO**.

The panel will not send Abort reports for Fire zones, Fire Verify, or Supervisory-type zones.

RESTORAL: **YES**
NO YES DISARM

Zone Restoral Reports

This option allows you to specify whether the panel sends zone restoral reports and also when they will be sent.

NO - Restoral reports are not sent by the panel.

YES - The panel always sends zone restoral reports at the time the zone restores from an alarm or trouble condition.

DISARM - The panel sends zone restoral reports when a zone that has restored from an alarm or trouble is disarmed. Twenty-four hour zones send restorals immediately.

BYPASS NO **YES**

Bypass Reports

YES allows the panel to send all zone bypass, reset, and force arm reports to the receiver. The bypass report includes the zone number, zone name, and the user number of the individual bypassing the zone.

SCHD CHG NO **YES**

Schedule Change Reports

YES allows the panel to send all schedule changes to the receiver. The report includes the day, opening time, closing time, extend schedule time, and the user name and number of the individual making the change.

CODE CHG NO **YES**

Code Change Reports

YES allows the panel to send all code additions, changes, and deletions to the receiver. The code change report includes the user number added or deleted and the user number of the individual making the change.

AMBUSH **NO** YES

Ambush

YES allows an ambush report to be sent any time user code number one is entered at a keypad. Selecting **NO** disables the ambush report and allows user code number one to operate the same as all other codes. Default is **NO**.

LATE TO OPEN
MINUTES: **0**

Late To Open

Enter 1-240 as the number of minutes to elapse that the system may remain armed after the opening time of a schedule without sending a Late To Open message. If the system continues to be armed after the Late to Open minutes expire, a Late To Open message is sent to the central station. Default is **0**, which disables the Late To Open option.

EARLY TO CLOSE
MINUTES: **0**

Early To Close

Enter 1-240 as the number of minutes that the system can be armed prior to the scheduled closing time. If the system is armed prior to the Early to Close minutes, an Early To Close message is sent to the central station. Default is **0**, which disables the Early to Close option.

SYSTEM INFO	**NO**	YES

Send System Information

If **YES** is selected, the panel family and panel serial number appear as additional identifiers on the end of the Serial 3 message sent to the monitoring center. The addition of the panel family and panel serial number helps monitoring center operators identify the correct system if two panels unintentionally use the same account number.

If **NO** is selected, the Serial 3 message does not include the panel family or panel serial number identifiers. Default is **NO**.

Note: This feature requires a SCS-VR Virtual Receiver or an SCS-1R Network Enabled Receiver with the SCS-150 Main Processor Card at firmware Version 108 (9/23/25).

SYSTEM OPTIONS

SYSTEM OPTIONS

System Options

This section allows you to select system wide parameters used in the operation of the XT75 system.

SYSTEM: HOME/AWAY
AREA **A/P** H/A

System

This configures the panel as either a six Area system, an All/Perimeter system (Perimeter/Interior), or a Home/Sleep/Away system (Perimeter, Interior, and Bedrooms).

Zones must be assigned to the bedroom area for Sleep to appear on the keypad.

CLS WAIT **NO** YES

Closing Wait

When **YES** is selected, the keypad displays ONE MOMENT... while waiting for an acknowledgment from the receiver before arming the selected area(s) and performing a Bell Test (if selected). Exit delays begin after the Closing Wait. Opening/Closing reports must be **YES** to enable Closing Wait.

ENTRY DLY 1: **30**
ENTRY DLY 2: 60

Entry Delay 1

Enter the entry delay time for all exit type zones programmed to use Entry Delay 1. When an armed Exit type zone is faulted, the keypad prewarn tone begins sounding. ENTER CODE: - and the name of the zone causing the Entry Delay displays on all keypads. All Burglary type zones in all areas are delayed along with the Exit zone.

When the first digit of a code is entered, the prewarn tone stops at the keypad. If, within five seconds, a valid user code is not entered or an invalid user code is entered, the prewarn tone begins sounding again. Fifteen seconds must elapse before entering a digit silences the prewarn tone again.

The area must be disarmed before the entry delay expires or an alarm will be tripped.

Entry delay times can be from 30 to 250 seconds. Repeat the above for Entry Delay 2 if it is being used. Default is **30 seconds** for Entry Delay 1.

ENTRY DLY 1: 30
ENTRY DLY 2: **60**

Entry Delay 2

Enter the entry delay time for all exit type zones programmed to use Entry Delay 1. When an armed Exit type zone is faulted, the keypad prewarn tone begins sounding. ENTER CODE: - and the name of the zone causing the Entry Delay displays on all keypads. All Burglary type zones in all areas are delayed along with the Exit zone.

When the first digit of a code is entered, the prewarn tone stops at the keypad. If, within five seconds, a valid user code is not entered or an invalid user code is entered, the prewarn tone begins sounding again. Fifteen seconds must elapse before entering a digit silences the prewarn tone again.

The area must be disarmed before the entry delay expires or an alarm will be tripped.

Entry delay times can be from 30 to 250 seconds. Repeat the above for Entry Delay 2 if it is being used. Default is **60 seconds** for Entry Delay 2.

CRS ZONE TM: 4

Cross Zone Time

Enter the time allowed between zone faults. When a zone programmed for cross zoning faults, the panel begins counting down the Cross-Zone Time entered here. If the same zone or another cross-zoned zone faults within this time, an alarm report is sent to the receiver.

If the Cross-Zone Time expires without the second zone fault, only a zone fault report from the first zone is sent to the receiver. The Cross-Zone Time can be from 4 to 250 seconds in one second increments. Enter **0** (zero) to disable the Cross-Zone Time feature.

PWR FAIL HRS: 1

Power Fail Delay

This option tracks the duration of an AC power failure. The delay time can be from 1 to 9 hours. When the AC power is off for the length of the programmed delay time, an AC power failure report is sent to the receiver. Entering a **0** (zero) sends the AC power failure report within 15 seconds.

SWGRBYPS TRIPS: **2**

Swinger Bypass Trips

Swinger Bypass allows the panel to bypass a zone from the system to avoid repeated false alarms caused by wind, rain, or other environmental factors while still tracking alarm sensor activity.

Bypassed zones are automatically reset when the area they are assigned to is disarmed. All 24-hour zones are reset when any area of the system is disarmed. A programming Stop operation restores a bypassed zone. Entering 0 (zero) disables this function. Default is **2**.

If within one hour, a zone trips the total number of times as specified in Swinger Bypass Trips, the panel bypasses it until the following conditions occur; the area in which the zone is assigned is disarmed, the zone is manually reset through the Bypass Zones keypad User Menu function, the zone remains normal for one hour and the Reset Swinger Bypass is YES. The panel hour timer starts at 59 minutes past the hour. If the hour timer expires before the trip counter is exceeded, the trip counter returns to 0 (zero). If the trip counter is exceeded before the hour expires, the zone is automatically bypassed by the panel. A Bypass Report is sent to the receiver if Bypass Reports is YES.

RST SBYP **NO** YES

Reset Swinger Bypass

When **YES** is selected, an automatically bypassed zone is reset if it remains in a normal condition for one complete hour after being bypassed. A report of the automatic reset is sent to the receiver if Bypass Reports has been selected as YES. Default is **NO**.

ZN ACTY HRS: **0**

Zone Activity Hours

This option provides supervision of a person living alone for non-activity. Enter the number of hours, 0 to 9, allowed to elapse without a disarmed zone being tripped before a message is sent to the receiver. Default is **0 (zero)**.

When the system is disarmed, the timer begins to countdown the number of hours programmed. Each time activity occurs, the timer restarts the countdown. Before the countdown time expires, the keypad sounds a tone and PRESS ANY KEY displays to allow the user to restart the activity timer. The duration of the tone is the number of seconds programmed for Entry Delay 2.

Select the SUPV/TRBL receiver option in COMMUNICATION programming to send S93 ALARM: User Activity Not Detected, S94 Alert: Activity Check Enabled, and S95 Alert: Activity Check Disabled messages.

When an open/close schedule is programmed, the timer only counts down during the scheduled open period. Also, when a schedule is programmed, if the timer is counting down and the scheduled open time occurs, the timer resets and begins the countdown again.

REQUEST TIME CHG
NO **SCS** SCW

Time Zone Changes

This option allows the panel to request automatic time changes from SecureCom Wireless® or the DMP SCS-1R or SCS-VR Receiver on Path 1. For the SCS receiver to send time changes, program it to send time changes and receive time change updates from the network automation computer at least every 24 hours. The default is **SCS**.

Select **NO** to not request time changes.

Select **SCS** to request time changes from the SCS-1R or SCS-VR Receiver.

Select **SCW** to request time changes from SecureCom Wireless.

DST?
NO **YES**

This option only displays if you selected SCW. The default is YES.

Select **NO** to not observe daylight saving time.

Select **YES** to observe daylight saving time.

HRS FROM GMT: **6**

When time zone is programmed **YES**, enter the number (0-23) that indicates the Greenwich Time zone (GMT) where the panel is located. The default is **6**. See table below for GMT values.

GMT	CITY/TIME ZONE
0	London, Monrovia, Lisbon, Dublin, Casablanca, Edinburgh
1	Cape Verde Island, Azores
2	Mid-Atlantic, Fernando de Noronha
3	Buenos Aires, Georgetown, Brasilia, Rio de Janeiro
4	Atlantic Time (Canada), Caracas, La Paz, Santiago
5	Eastern Time (US, Canada) Bogota, Lima, Arequipa
6	Central Time (US, Canada), Mexico City, Saskatchewan
7	Mountain Time (US, Canada), Edmonton
8	Pacific Time (US, Canada), Tijuana
9	Alaska
10	Hawaii
11	Midway Island, Samoa
12	Fiji, Marshall Island, Wellington, Auckland, Kwajalein, Kamchatka
13	New Caledonia
14	Guam, Sydney
15	Tokyo, Seoul
16	Hong Kong, Singapore
17	Bangkok, Hanoi
18	Dhaka, Almaty
19	Islamabad, Karachi
20	Abu Dhabi, Kazan
21	Moscow, Bagdad
22	Eastern Europe
23	Rome, Paris, Berlin

LATCH SV NO **YES**

Latch Supervisory Zones

Selecting **YES** latches supervisory zone alarms on the keypad display until the sensor reset operation is performed. Selecting **NO** automatically clears the alarm from the keypad display when the supervisory zone restores to a normal condition. Default is **YES**.

BYPASS LIMIT **0**

Bypass Limit

Enter the maximum number of zones (0 to 8) that can be bypassed in any single area when that area is being armed at a keypad. If more zones than the limit are in a non-normal state or already bypassed at arming, arming does not occur and Arming Stopped displays. The Bypass limit does not affect auto arming, keyswitch arming, or remote arming. Entering 0 (zero) allows no limit. Default is **0 (zero)**.

WIRELESS
HOUSE CODE: **0**

House Code

When using a DMP wireless system, enter a house code between 1 and 50. The default is **0** (zero) indicating the DMP wireless system is not being used. The house code identifies the panel, receiver, and transmitters to each other. When operating, the receiver listens for transmissions that have the programmed house code and transmitter serial number.

When any wireless zone programming is changed in the panel, wireless receiver zone programming is updated by the panel. At that point, all wireless zones display as normal for up to 1 minute, regardless of the actual state of the zone.

DETECT WIRELESS
JAMMING: **NO** YES

Detect Wireless Jamming

This option displays when the House Code entered is for a DMP 1100XH/E Series Wireless Receiver. When enabled and the receiver detects jamming, a trouble or alarm message is sent to the receiver and displays in the Status List. Select **YES** to enable jamming messages to display in the Status List. Select NO to disable jamming messages. Default is **NO**.

BUILT IN 1100
WIRELESS NO YES

Built-In 1100 Wireless

Select **YES** if using the built-in wireless receiver on the XT75. Select **NO** to use the X-Bus Connection with the 1100XH Series Wireless Receiver on the panel

The XT75 has 10 on-board hardwired zones, 32 wired or wireless expansion zones using the keypad bus addresses, and up to 50 hardwired zones or up to 100 wireless zones using the LX-Bus for a total of up to 142 total zones.

1100 ENCRYPTION
ALL BOTH **NONE**

Wireless Encryption

Encryption allows the panel to communicate with encrypted 1100 Series wireless devices that are v200 and higher. Select **ALL** to allow encryption for all the wireless devices programmed into the system. Select **BOTH** to allow both encrypted and non-encrypted wireless devices to be programmed into the system. Select **NONE** to not allow encryption for wireless devices programmed into the system. The default is **NONE**.

1100 PASSPHRASE
****

Enter Passphrase

ENTER PASSPHRASE displays if you select **ALL** or **BOTH** for wireless encryption. In order for the panel to support encrypted 1100 Series wireless devices, a passphrase must be entered. The passphrase must be an 8-digit hexadecimal number which determines the system's encryption key.

TRBL AUDIBLE: **DAY**

Trouble Audible Annunciation

This option allows you to choose when trouble audibles will annunciate from the keypad. Press any top row key to select the keypad buzzer annunciation method for wireless low battery and missing messages.

Select **ANY** to enable annunciation anytime.

Select **DAY** to enable annunciation except during sleeping hours (9 PM to 9 AM).

Select **MIN** (minimum) to annunciate only Fire and Fire Verify zones during daytime hours (9 AM to 9 PM). Default is **DAY**.

KEYPAD PANIC KEYS
ENABLED: NO **YES**

Enable Keypad Panic Keys

This option allows the two-button panic key operation selected at a keypad to send the Panic, Holdup, Emergency, or Fire message to the monitoring center receiver. Select **YES** to enable the two-button panic operation. To disable the two-button panic operation, select **NO**. Default is **YES**.

OCCUPIED
PREMISES: NO **YES**

Occupied Premises

Select **YES** to allow the panel to automatically disarm the interior area(s) when arming all areas, and a perimeter zone is not tripped during the exit delay. For Area Systems, select **NO** to prevent the Exit Delay from restarting.

This False Alarm Reduction feature will keep a user from arming the entire system when they do not exit and remain in the premises. Select **NO** to not automatically disarm interior area(s). Default is **YES**.

KEYPAD ARMED LED
ANY **ALL**

Keypad Armed LED

This option displays only when using an Area system. Press any top row key to select the operation of the Armed LED on the keypad. Select **ALL** to require all keypad display areas to be armed before the keypad Armed LED turns on. Select **ANY** to turn on the keypad Armed LED when any keypad display area is armed. Default is **ALL**.

USE FALSE ALARM
QUESTION NO **YES**

Use False Alarm Question

This option allows users to investigate a burglary alarm prior to disarming the system and send an Alarm Verified or Alarm Cancelled message to the Central Station.

Select **YES** to display IS THIS A FALSE ALARM? NO YES when a burglar alarm occurs. Select **NO** to display CANCEL VERIFY. Default is **YES**.

When a burglar alarm occurs in an area system and a user code is entered at a keypad Status List, keypads programmed as KPD in Device Setup display IS THIS A FALSE ALARM? NO YES or CANCEL VERIFY. The option is not displayed at devices programmed as DOOR. Selecting NO or VERIFY sends an alarm message to the Central Station. Selecting YES or CANCEL sends an alarm cancelled message to the Central Station and disarms the areas that the user has the authority to disarm. This display remains on the keypad until a selection is made, the Back Arrow is pressed, or the internal system bell cutoff timer expires.

ENTER WEATHER
ZIP CODE: **0**

Weather Zip Code

This option allows local U.S.A. weather updates to display on the keypad. Enter the zip code of the user at this option. When no number is entered weather conditions are not displayed. Default is **0 (zero)**.

If using a 7800 Series or 8860 Series keypad, the current weather conditions and the next day's forecast display as graphics on the Main Screen. All other DMP keypads display the weather information in the Status List.

CELSIUS: **NO** YES

Celsius Temperature Option

This prompt determines whether the panel should use Celsius for displayed thermostat temperatures.

BELL OPTIONS

BELL OPTIONS

Bell Options

This section allows you to program the panel bell output functions. If using the Model 1135 Wireless Siren for local annunciation, the Trip with Panel Bell option should be selected in Output Setup programming for the siren.

BELL CUTOFF: **5**

Bell Cutoff Time

Enter the maximum time from 1 to 15 minutes the Bell Output remains on. If the Bell Output is manually silenced or the system is disarmed, the cutoff time is reset. Enter zero to provide continuous bell output. Default is **5**.

To support the Cancel/Verify operation on an All/Perimeter or Home/Sleep/Away system, set the Bell Cutoff Time to greater than 0.

BELL TST **NO** YES

Automatic Bell Test

When **YES** is selected, the Bell Output will sound twice when all areas in the system are armed. The Bell Test only occurs when the areas are armed from a keypad. Arming performed from an Arming zone or remotely from Dealer Admin does not activate the Bell Test. In addition, the Closing Wait operation is activated if Opening/Closing Reports are enabled.

Closing Wait operation:

Closing Wait provides a delay time before a monitored system arms until the panel receives an acknowledgment of the closing report from the central station receiver. During the delay, the keypad displays ONE MOMENT . . . Once the closing is acknowledged, the keypad buzzes for one second and then displays the ALL SYSTEM ON message. If the primary communication fails, but the backup communication is successful, then the message BACKUP ALR ONLY appears. If both primary and backup communication fail, the message LOCAL ALARM ONLY will appear.

BELL OUTPUT: 0

Bell Output

Enter the output/Z-Wave Favorite number to follow the panel Bell terminal 5 operation for all action and off conditions. Enter 0 (zero) to disable.

When BELL ACTION below is set to T for Temporal Code 3, this Bell Output action will be Pulse for wired outputs 1-4, wireless outputs 450-474 (slow) and 480-499 (fast).

BELL ACTION . . . . .

Bell Action

This defines the type of Bell Action from zone alarms that occurs on the panel's bell terminal number 5. Trouble conditions do not activate Bell Action. There are eight zone types you can program individually for Bell Output. To provide a steady Bell Output, enter S. For a pulsed output, enter P. For a Temporal Code 3 output, enter T, and 4 for a Temporal Code 4 output. For no Bell Output, enter N.

FIRE TYPE: **T**

Fire

Defines Bell Action for Fire Type Zones. The default is set at **T**.

BURGLARY TYPE: **S**

Burglary

Defines Bell Action for Burglary Type Zones. The default is set at **S**.

SUPRVSRY TYPE: **N**

Supervisory

Defines Bell Action for Supervisory Type Zones. The default is set at **N**.

PANIC TYPE: **N**

Panic

Defines Bell Action for Panic Type Zones. The default is set at **N**.

EMERGNCY TYPE: **N**

Emergency

Defines Bell Action for Emergency Type Zones. The default is set at **N**.

AUXLRY 1 TYPE:	**N**

Auxiliary 1
Defines Bell Action for Auxiliary 1 Type Zones. The default is set at **N**.

AUX 2 TYPE:	**N**

Auxiliary 2
Defines Bell Action for Auxiliary 2 Type Zones. The default is set at **N**.

CO TYPE:	**4**

Carbon Monoxide (CO)
Defines Bell Action for Carbon Monoxide (CO) Type Zones. The default is set at **4**.

OUTPUT OPTIONS

OUTPUT OPTIONS

Output Options

This section allows you to program panel output options. Switched Ground (open collector) outputs are available using the 4-wire output harness on the XT75 board. Wireless outputs are available when using the built-in 1100 Series Receiver or an 1100XH Series Wireless Receiver. Refer to the installation section for complete information.

Select from the following output numbers:

- 1 to 4
- 450-474
- 480-499
- F1 to F20 (To Activate Z-Wave Favorites)
- D01-D08

CO OUTS: - - - - - -

Cutoff Outputs

The cutoff outputs option allows you to define the operation of the four on-board annunciator outputs. For each programming option, enter the number of the output you wish to activate or 0 (zero) for no output. Any or all of the available outputs can be programmed here to turn off after the time specified in Output Cutoff Time. See the Output Cutoff Time section for additional information. To disable this option, press any Select key to clear the display of output numbers and then press **CMD**.

Whenever an output is assigned in Output Options, that output cannot be turned on from the User Menu.

CUTOFF TIME: 0

Output Cutoff Time

If a Cutoff Output is assigned, you can enter a Cutoff Time for the output to remain on up to 15 minutes. If the output is turned off manually, the cutoff time is reset. The Cutoff Time can be 1 - 15 minutes. Enter 0 (zero) to provide continuous output.

The output is cutoff within 60 seconds of the programmed cutoff time.

The Cutoff Timer is shared by all outputs. If a second output trips, the timer is not reset. Both outputs turn off when the original time expires.

COM FAIL OUT: 0

Communication Failure Output

This output/favorite turns on when the panel fails to communicate with the receiver after three successive dial attempts. Enter 0 (zero) to disable this output.

To turn off the Communication Failure Output, disarm the panel.

FIRE ALR OUT: 0

Fire Alarm Output

This output/Favorite turns on any time a fire type zone is placed in alarm. The output turns off using the Sensor Reset option when no additional fire type zones are in alarm. Enter 0 (zero) to disable this output.

FIRE TRB OUT: 0

Fire Trouble Output

This output/Favorite turns on any time a fire type zone is placed in trouble or when a supervisory type zone is placed in alarm or trouble. The output turns off when all fire and supervisory type zones restore to normal. Enter 0 (zero) to disable.

PANIC ALM OUT: 0

Panic Alarm Output

This output/Favorite turns on any time a Panic Zone (PN) is placed in alarm. The output turns off using the Sensor Reset option once all Panic Zones are restored. Enter 0 (zero) to disable this output.

If a wireless output is programmed, the panel sends the Panic Test Cadence or the Panic Alarm Cadence to the output when a Panic Test is performed or a Panic Zone is placed in alarm.

AMBUSH OUT: 0

Ambush Output

This output/Favorite turns on any time an Ambush code is entered at a keypad. The output turns off using the Sensor Reset option. Enter 0 (zero) to disable this output.

ENTRY OUT: 0

Entry Output

This output/Favorite turns on at the start of the entry delay time. The output turns off when the area disarms or the entry delay time expires. Enter 0 (zero) to disable.

BEG EXIT OUT: 0

Begin Exit Output

This output/Favorite turns on any time an exit delay time starts. The output turns off when the system arms or when the arming has been stopped. Enter 0 (zero) to disable.

END EXIT OUT: 0

End Exit Output

This output/Favorite turns on any time an exit delay time ends. The output turns off when the system disarms. Enter 0 (zero) to disable.

READY OUT: 0

Ready Output

This output/Favorite turns on whenever all disarmed zones are in a normal state. The output turns off when any disarmed zone is in a bad state. Enter 0 (zero) to disable.

DISARMED OUT: 0

Disarmed Output

This output/Favorite turns on when all areas of the panel are disarmed. The output turns off when an area is armed.

LATE CLS OUT: 0

Late To Close Output

Enter the output/Favorite to turn on at the expiration of a closing schedule when all areas are not armed. The output activates simultaneously with the CLOSING TIME! keypad display. The output is turned off when all areas are armed, the closing is extended, or the schedule is changed.

DVC FAIL OUT: 0

Device Fail Output

Enter the output/favorite number to turn on when an addressed device fails to respond to polling from the panel. A Missing Device report is sent to the receiver and is stored as an event in the panel. The output is turned off when the device responds to polling or is removed from programming in the system. Enter 0 (zero) to disable this output and LX-Bus™ device fail reporting to the receiver. If any addressed device is unsupervised, this output cannot be used.

SNSR RST OUT: 0

Sensor Reset Output

Enter the output/Favorite number to turn on when a Sensor Reset is performed at a keypad. The output turns off automatically 5 seconds later. This function can be used to reset smoke detectors that are operated by an external power supply through a Model 716 Output Expander Module. Enter 0 (zero) to disable this output.

CLS WAIT OUT: 0

Closing Wait Output

Enter the output/Favorite number to turn on for approximately four (4) seconds when Closing Wait is programmed as YES and the panel successfully communicates the closing message at arming. If the closing message does not communicate successfully, this output does not turn on.

ARM-ALARM OUT: 0

Arm-Alarm Output

Enter the output/Favorite to turn on steady when any area of the system is armed. If an alarm occurs causing the keypads to turn Red, this output pulses and continues to pulse for approximately three (3) minutes after the panel is disarmed. Enter 0 (zero) to disable.

Wireless Outputs

- The Arm-Alarm Output is compatible with the Model 1117 Wireless LED Annunciator and the Model 1116 Wireless Relay Output connected to a Model 572 Indicator LED.
- When the Model 1117 is battery operated, the LED is off when the system is armed to conserve battery life. If an alarm occurs, the output flashes quickly.
- Using the Model 1116 connected to a Model 572, the LED is on when the system is armed. If an alarm occurs, the output pulses.
- To operate the Arm-Alarm output within one second, program a fast response number from 480 to 499. Fast response operation reduces overall wireless output battery life.
- To operate the Arm-Alarm output within 15 seconds, program a slow response number from 450 to 474. Slow response operation increases overall wireless output battery life.

SUPV ALM OUT: 0

Supervisory Alarm Output

Enter the output/Favorite number to turn on when a supervisory zone type is placed into an alarm. The output turns off when all supervisory type zones are restored to normal. Enter 0 (zero) to disable. Default is **0**.

HEAT SAVER
TEMPERATURE: 0

Heat Saver Temperature

Enter the desired temperature setting for all Z-Wave thermostats when the system is armed ALL or AWAY. When the system is disarmed the thermostats return to their previous settings. The range is 55-95 degrees. Enter 0 (zero) to disable.

COOL SAVER
TEMPERATURE: 0

Cool Saver Temperature

Enter the desired temperature setting for all Z-Wave thermostats when the system is armed ALL or AWAY. When the system is disarmed the thermostats return to their previous settings. The range is 55-95 degrees. Enter 0 (zero) to disable.

AC FAIL OUT: 0

AC Fail Output

This output turns on when the panel detects no AC. The output is turned off immediately when AC power is detected.

OUTPUT OPTIONS
CO ALRM OUT: XXX

Carbon Monoxide Alarm Output

This output turns on any time a Carbon Monoxide Zone (CO) is placed in alarm. The output is turned off using Sensor Reset option while no additional CO type zones are in alarm.

OUTPUT OPTIONS
LOCKDOWN OUT: XXX

Lockdown Output Alarm Output

This output turns on any time a Lockdown Output Zone is placed in alarm. The output is turned off using Sensor Reset option while no additional Lockdown type zones are in alarm.

OUTPUT OPTIONS
ZN MNTR OUT: XXX

Zone Monitor Output

This output turns on momentarily when a zone monitor tone is activated on keypads. If zone monitoring is turned off, the zone monitor output will not trigger.

OUTPUT INFORMATION

OUTPUT INFO

Output Information

This section allows you to program and name wired and wireless outputs into the XT75 when using the built-in receiver. Wireless outputs are available when using the built-in 1100 Series Receiver or an 1100XH Series Wireless Receiver.

OUTPUT NUMBER

Output Number

Enter an output number. Select from the following output numbers:

- 1 to 4
- 450-474 — Slow response time* wireless outputs (activate within 15 seconds)
- 480-499 — Fast response time* wireless outputs (activate within 1 second)

Addresses 450-474 and 480-499 are available for wireless outputs, keypad bus zones, wireless zones or wireless key fob zones and can only be assigned to one device.

* The response time of a wireless output is the time it takes for a wireless output to activate once the panel event occurs. A slow response output number extends battery life, but response time may be up to 15 seconds. A fast response output number responds within 1 second, but reduces battery life. Refer to the specific wireless output installation guide to determine battery life.

OUTPUT NAME

Output Name

This section allows you to define a 32 character alphanumeric name for any output number.

Hardwired outputs (Output Numbers 1-4) default to the number of the output. Press a top row select key to enter a name.

Wireless outputs (Output Numbers 450 - 474 (slow) and 480-499 (fast)) are initially named *UNUSED* and are not part of the system until they are assigned a name. Press any select key or area to enter a name.

To mark a wireless output unused, delete the old name by pressing any select key or area, then press **CMD**. The programmer automatically programs the name as * UNUSED *.

OUTPUT REAL-TIME STATUS **NO** YES

Output Real-Time Status

Selecting **YES** allows Real-Time Status reports of a hardwire device, such as Output ON, OFF, PULSE, or TEMPORAL to be sent using PC Log reports. Selecting **NO** disables Real-Time Status for this output device. Default is **NO**.

SERIAL#: XXXXXXXX

Serial Number

Enter the eight-digit serial number found on the wireless device.

Already In Use displays when the serial number is already programmed for another output or zone. The programmed output or zone number displays.

SUPERVSN TIME: 240
0 3 60 **240**

Supervision Time

Press any select key or area to select the supervision time required for the wireless output. Default is **240 minutes**.

The transmitter must check in at least once during this time or a missing condition is indicated for that zone. 1100 Series transmitters automatically check in based on the supervision time selected for the wireless zone, no additional programming is needed. Zero (0) indicates an unsupervised transmitter.

The 3 minute supervision time is only available if using an 1135 Wireless Siren.

When the panel is reset, a receiver is installed or powered down and powered up, or programming is complete, the supervision timer restarts for all wireless outputs.

TRIP WITH PANEL
BELL NO **YES**

Trip with Panel Bell Option

This option displays when the wireless device is an 1135 wireless siren. Select **YES** to have the 1135 wireless siren follow the panel's bell output cadence for the zone type and bell cutoff time. Default is **YES**.

AREA INFORMATION

AREA INFORMATION

Area Information

This section allows you to assign functions to individual areas for XT75 panels. All non-24-hour zones must be assigned to an active area.

EXIT DELAY: 60

Exit Delay

Enter the exit delay time for all Exit type zones in this area. When the exit delay time starts, all activity on that zone and other non-24-hour zone types in the area is ignored until the exit delay expires. The keypad displays the Exit Delay time countdown and annunciates the Exit Delay tone at 8 second intervals until the last 10 seconds when annunciation is at 3 second intervals.

The exit delay can be from 30 to 250 seconds. Default is **60 seconds**.

During Exit Delay, if an exit zone trips, then restores, and trips again, the Exit Delay timer restarts. This restart can occur only once. For Area Systems, select **NO** to prevent the Exit Delay from restarting.

Exit Error Operation: At arming, when an entry/exit zone (EX) is **faulted** at the end of the exit delay then one of two sequences occur:

For Entry Delay 1 EX type zones:

- The bell sounds for the length of time set in Bell Cutoff programming
- The Enter Delay operation starts requiring
- If not disarmed, a zone alarm and exit error are sent to the receiver

For Entry Delay 2-4 EX type zones:

- The zone is force armed and a zone force arm message is sent to the receiver
- An Exit Error is sent to the receiver
- The bell sounds for the length of time set in Bell Cutoff programming

CLS CHK **NO** YES

Closing Check

Select **YES** to enable the panel to verify that all areas in the system are armed after permanent or extended schedules expire. If the Closing Check finds any areas disarmed past the scheduled time, the keypads selected to display System Trouble Status displays CLOSING TIME! and emits a steady beep. When Area Schedules is set to **YES** in Area Information, the specific area and name display followed by — LATE.

When Auto Arm is **NO**, if within ten minutes the system is not armed or if the schedule is not extended, a Late to Close report is sent to the SCS-1R Receiver. When Auto Arm is **YES**, the area arms.

If the area becomes disarmed outside of any schedule, the Closing Check sequence occurs after the Late Arm Delay time.

When Closing Check is **NO** and Auto Arm is **YES**, the system immediately arms when the schedule expires. No warning tone occurs.

In addition, when Closing Check is **NO**, the option to extend a schedule does not display when the schedule expires.

CLS CODE **NO** YES

Closing Code

When YES is selected, a code number is required for system arming. If NO is selected, a code number is not required for system arming.

ANY BYPS **NO** YES

Any Bypass

When YES is selected, zones can be bypassed without a code number during the arming sequence. A code number is always required to use the Bypass Zones option from the menu.

AREA SCH **NO** YES

Area Schedules

Select **YES** to allow each area to follow individual sets of area schedules programmed in the User Menu. Select **NO** for all areas to follow only one set of schedules in the User Menu. See the panel User Guide to add schedules to the panel. Area Schedules are not designed to operate with All/Perimeter or Home/Sleep/Away systems.

AREA NO: -

Area Number

Enter the number of the area to program. In an area system, select from areas 1 to 6. In an All/Perimeter system, select Interior or Perimeter. In a Home/Away system, select Interior, Bedroom, or Perimeter.

* UNUSED *

Area Name

Activate an area by assigning it a name in place of a number to assist the user during arming and disarming. Only those areas given names are active and can have zones assigned to them. All others are marked *UNUSED*.

To add an area name to the system, press any select key or area and then enter up to 32 characters for the new name.

To mark an active area as unused, delete the old name by pressing any select key or area then press CMD. The panel automatically sets the name as *UNUSED*.

O/C RPTS **NO** YES

Opening/Closing Reports

This option allows an Opening/Closing report to be sent to the receiver when this area is disarmed or armed.

AUTO ARM **NO** YES

Automatic Arming

Select **YES** to allow this area to arm automatically according to the opening and closing schedule.

If Closing Check is selected as YES, the automatic arming does not take place until the expiration of a 10-minute Closing Check delay. If the area has been disarmed outside a schedule, the Closing Check delay occurs one hour after the area is disarmed.

At arming, faulted zones are handled according to the option selected in Bad Zones. Select **NO** to disable automatic arming for this area. Default is **NO**.

AUTO DIS **NO** YES

Automatic Disarming

NO disables automatic disarming by schedule for this area. When YES is selected, the area automatically disarms according to permanent or temporary schedules. If an opening report is sent to the receiver, the user number is indicated as SCH.

BAD ZONES: **BYP**

BYP FORC REF

Bad Zones

At the time of automatic arming, some zones in the area may not be in a normal condition. This option allows you to program the panel's response to these bad zones. This option is not displayed if AUTO ARM is NO.

BYP - All bad zones are bypassed. A report of the bypass is sent to the receiver if Bypass Reports has been selected as YES. See the Bypass Reports section. The report indicates SCH as the user number.

FORC - All bad zones are force armed. Zones force armed in a bad condition are capable of restoring into the system and reporting alarms if tripped. A report of the force arm is sent if Bypass Reports is YES. See the Bypass Reports section. The report indicates the user number as SCH.

REF - The automatic arming is refused and no arming takes place. A No Closing report is sent to the receiver regardless of the Closing Check selection.

For listed installations, set Bad Zones to REF.

BURG BEL

Burglary Bell OutputEnter the output number (0 to 6, 500 to 599, D01 to D08, or F1 to F20) that is turned on any time a Burglary type zone is placed in alarm. The output is turned off when you disarm any area and no other Burglary type zones are in alarm. The output can also be turned off using the Alarm Silence option in the User Menu or by entering a user code with the authority to silence alarms. The duration of this bell output follows the time entered in the Bell Options > Bell Cutoff Time option. The Burglary Bell Output entered here is turned on for two seconds each time the system is armed

ARMED OUTPUT: 0

Armed Output Number

Enter the output to turn on when this area is armed. If an exit delay is used for this area, the Armed Output turns on at the start of the exit delay. The output is turned off when this area is disarmed. The output cannot be turned on from the User Menu Outputs On/Off option.

LATE OUTPUT: 0

Late Output Number

Enter the output to turn on when this area is not armed by its scheduled time and Area Late or Closing Time displays at a keypad and the keypad buzzer is on. The output is turned off when the keypad buzzer is silenced by pressing any key. Default is **0 (zero)**.

LATE/ARM DLY: **60**

Late Arm Delay

Enter 4 to 250 minutes to delay before automatic re-arming occurs after the area becomes disarmed outside of schedules. See Closing Check. Default is **60 minutes**.

The Late Arm Delay can be superseded by the Re Arm Delay setting of the User Profile assigned to the user who disarmed the area.

ZONE INFORMATION

ZONE INFORMATION

Zone Information

This allows you to define the operation of each protection zone used in the system.

ZONE NO: -

Zone Number

Enter the number of the zone you intend to program. Press **CMD**.

KEYPAD ADDRESS	ZONE NUMBERS
1	11-14
2	21-24
3	31-34
4	41-44
5	51-54
6	61-64
7	71-74
8	81-84
Use output numbers 450-474 (slow response) or 480-499 (fast response) with 1100 Series Wireless output modules.	
LX-BUS ADDRESSES	
Wired Zones	**Wireless Zones**
500-549	500-599

The panel has 10 hard wired zones, 32 wired zones using the keypad bus addresses, and up to 50 hardwired zones or up to 100 wireless zones using the LX-Bus for a total of up to 142 total zones.

* UNUSED *

Zone Name

Press any select key or area and enter up to 32 characters for the zone name. A name must be given to each zone in the system. This name can be displayed at the keypads when the zone is bad or viewed in Display Events. The zone name is also sent to the receiver as part of a zone event report.

ZONE LOCATION

Zone Location

This feature is optional and allows you to specify a zone location, separate from the zone name. Enter a descriptive location for the zone, such as 2nd Floor East Wing. The zone location is only sent to the monitoring center to help dispatchers identify where an alarm is triggered and does not display on the keypad. You can enter up to 32 characters for the zone location name.

ZONE TYPE: BLANK

Zone Type

The Zone Type defines the panel's response to the zone being opened or shorted. When you assign a Zone Type to a zone, responses are made automatically for the zone.

- - NT DY EX

To select a new Zone Type, press any select key or area. The display lists the four Zone Types shown below. When the Zone Type you want to select displays, press the select key or area below the name.

FI PN EM SV

Blank, Night, Day, or Exit. Press **CMD** to display additional zone types.

A1 A2 FV AR

Fire, Panic, Emergency, or Supervisory. Press **CMD** to display additional zone types.

CO IN DB HU

Auxiliary 1, Auxiliary 2, Fire Verify, Arming. Press **CMD** to display additional zone types.

CO for use with Carbon Monoxide detectors, Instant, Doorbell, or Holdup. Press the Back Arrow key to display the previous zone types.

If you select Blank, Night, Day, Exit, Instant, Auxiliary 1, or Auxiliary 2 as the Zone Type, the zone must be assigned to an area. If you select Fire, Panic, Holdup, Emergency, Supervisory, or Carbon Monoxide (CO) as the Zone Type, these are 24-hour zones that are always armed and no area assignment is needed. Press **CMD** to continue.

Caution: When a sensor reset is performed at the keypad, power will drop to devices connected to zone 10 causing the panel to sense an open condition on all zone types other than Fire (FI), Fire Verify (FV), Carbon Monoxide (CO), and Supervisory (SV). Whenever non-Fire and non-Supervisory zone types are used on zone 10, make the appropriate adjustments to the zone Armed Action to prevent false alarms from occurring.

AREA:

Arm Areas

For Area systems, this option specifies the areas to be armed by the Arming Type zone. Press the appropriate number keys on the keypad to assign areas 1 to 6. When disarmed, all programmed areas are disarmed.

ARM AREAS: PERIM

For All/Perimeter systems, choose PERIM or ALL. For Home/Sleep/Away systems, choose HOME, SLEEP, or AWAY.

PERIM ALL

Perimeter/All - Specify whether the arming zone arms just the Perimeter (PERIM) or the Perimeter and Interior areas (ALL) for All/Perimeter systems. When disarming, all areas are disarmed.

HOME SLEEP AWAY

HOME/SLEEP/AWAY - Specify whether the arming zone arms the Perimeter (HOME), the Perimeter and Interior (SLEEP), or all three areas (AWAY). When disarming, all areas are disarmed.

AREA NO: -

Area Assignment

For Area systems, select the area that the zone will be armed and disarmed with.

AREA: PERIMETER

For All/Perimeter systems, choose INTERIOR or PERIMETER.

INT (Interior) - Assigns the zone to Interior.

INT PERIM

PERIM (Perimeter) - Assigns the zone to Perimeter.

For Home/Sleep/Away systems, choose HOME, SLEEP, or AWAY

FIRE BELL OUT: 0

Fire Bell Output

This output (1 to 6, 500 to 599, F1 to F20, or D01 to D08) is turned on any time a Fire, Fire Verify, or Supervisory zone is placed in alarm. The output is turned off by any of the following actions:

When the User Menu Alarm Silence function is performed.

When a valid user code is entered to silence the bell.

When the Silence key is pressed on the 630F Remote Fire Command Center.

Using the Outputs On/Off function in the User Menu.

The expiration of the Bell Cutoff time.

This output can be connected to a lamp, LED, or buzzer using the DMP Model 716 Output Expansion Module.

STYLE:

Style

This option specifies the style for the arming/disarming operation. The default style is TGL (toggle). Press any select key or area to display the STYLE options. To view more style options press **CMD**.

TGL ARM DIS STEP

TGL (Toggle) - When the zone changes from normal to short, the programmed areas toggle between the armed or disarmed condition. When restored to normal, no action occurs. When the zone is opened from a disarmed state, a trouble is reported. When opened from an armed state, an alarm is reported and the zone is disabled until you disarm the area(s) from either a keypad or Virtual Keypad.

ARM - When the zone is shorted, the programmed areas are armed. When restored to normal, no action occurs. When the zone is opened from a disarmed state, a trouble is reported. When opened from an armed state, an alarm is reported.

DIS (Disarm) - When programmed as an Area system, a short will disarm the programmed areas. When programmed as a ALL/PERIM or HOME/AWAY system, a short will disarm ALL areas. When restored to normal, no action occurs. When the zone is opened from a normal (disarmed) state, a trouble is reported.

STEP - When programmed as an AREA system, the Arming Type areas will arm and beep the keypads once. When programmed as ALL/PERIM or HOME/AWAY, on the first short HOME will arm and beep the keypad once. On the second short, SLEEP will arm and beep the keypads twice. On the third short, AWAY will arm and beep the keypad three times. A normal condition will cause no action. An open condition will disarm the programmed areas and beep the keypads for one second.

MNT

MNT (Maintain) - When the zone is shorted, the programmed areas are armed. When restored to normal, the programmed areas are disarmed and any alarm bells are silenced. When the zone is opened from a normal (disarmed) state, a trouble is reported. If opened from a shorted (armed) state, an alarm is reported and the zone is disabled until you disarm the area(s) from either a keypad or Virtual keypad.

EXP SN:

Expander Serial Number

If using a zone expansion module, enter the 10 character serial number found on the module. Press **CMD** to move to the next prompt.

Already In Use displays when the serial number is already programmed for another zone. The programmed zone number displays.

NEXT ZN? NO YES

Next Zone

When YES is selected, the programming for the zone is finished and the display returns to ZONE NO: - allowing you to enter a new zone number.

Select NO to program wireless devices or to make changes to the Alarm Action for a zone. The Alarm Action is defined after 1100 Series Wireless Key Fob programming.

DMP Wireless

For 1100 series wireless operation, set the House Code from 1 to 50. See House Code programming in System Options.

All wireless programming is stored in the XT75 panel. The Wireless Receiver obtains the necessary programming information from the panel each time the receiver powers up, when the programmer STOP routine is selected or the panel is reset.

```
WIRELESS?    NO   YES
```

Wireless

Select YES to program this zone as a DMP wireless zone. Default is **NO**.

For wireless zones 550-599 on the XT75, this option does not display.

```
COMP WLS?   NO   YES
```

Competitor Wireless

Select YES to program this zone as a wireless zone if using the 1100T Wireless Translator. Default is **NO**.

```
COMP WLS SRL #: -
```

Competitor Wireless Serial Number

If using an 1100T Wireless Translator, you can press the first top row select key or area and manually enter the eight character serial number found on the wireless device. Once the signal is detected and read, the device serial number will display on the keypad screen.

To transmit the serial number to the panel automatically. Select the LRN option. When TRANSMIT NOW appears on the keypad, tamper the transmitter that is being paired. Once the panel has received the tamper signal, the serial number will display on the keypad.

```
TRANSMITTER
SERIAL#: XXXXXXXX
```

Serial Number Entry

Enter the eight digit serial number, including leading zeros, found on the wireless device.

```
ALREADY IN USE
ZONE NUMBER: XXX
```

Already In Use displays when the serial number is already programmed for another zone. The programmed zone number displays.

```
TRANSMITTER
CONTACT: XXXXXXXX
```

Contact

This option displays if the serial number entered is for an 1101, 1102, 1103 or 1106 Universal Transmitter or 1114 Wireless Four-Zone Expander. Press any top row key to select the contact.

The 1102 Universal Transmitter only provides an external contact.

```
TRANSMTR CONTACT
INT          EXT
```

This option displays when programming an 1101, 1102, 1103 or 1106 Transmitter. Select INT to use the internal reed switch contacts. Select EXT to connect an external device to the transmitter's terminal block. Default is **INTERNAL**.

By allowing both of the Model 1101, 1103, or 1106 transmitter contacts (INT and EXT) to be used at the same time, two zones may be programmed from one transmitter. When using both contacts, you must use consecutive zone numbers.

```
TRANSMTR CONTACT
 1    2    3    4
```

This option displays when programming an 1114 zone expander which provides four input contacts. Press any top row key to select the contact. Default is **Contact 1**.

Select the contact number to program. The same transmitter serial number is used for all four contacts. When using the contacts, use consecutive zone numbers.

```
ALREADY IN USE
ZONE NUMBER: XXX
```

This message displays when the Contact is already programmed for another zone. The programmed zone number displays.

```
ZONE INFORMATION
NORM OPN   NO   YES
```

The Normally Open option only displays when EXT is selected as the Contact type. For external devices connected to the 1101, 1102, 1103, or 1106 terminal block, select NO to use normally closed (N/C) contacts. Select YES to use normally open (N/O) contacts. Default is **NO**.

TRANSMITTER
SUPRVSN TIME: 240

Supervision Time

Press any top row key to select the supervision time required for the wireless zone. Press **CMD** to accept the default time. Default is **240 minutes**.

SELECT MINUTES:
0 3 60 **240**

Select the required number of minutes. If using competitor wireless, the supervision time is measured in hours. If using competitor wireless, the transmitter must check in at least once during this time or a missing condition is indicated for that zone. 1100 Series transmitters automatically checkin based on the supervision time selected for the wireless zone, no additional programming is needed. If two zones share the same transmitter, the last programmed supervision time is stored as the supervision time for both zones. Zero (0) indicates an unsupervised transmitter.

The 3 minute supervision time is only available for zone types of Fire (FI), Fire Verify (FV), Supervisory (SV), and Carbon Monoxide (CO).

When the panel is reset or a receiver is installed or powered down and powered up, the supervision timer restarts for all wireless zones.

LED OPERATION
NO **YES**

LED Operation

This only displays when programming a panic or pendant transmitter. Select YES to turn a panic or pendant LED on during normal operation. Select NO to turn the LED off during normal operation. The LED always operates on all transmitters when the transmitter case is open and the tamper is faulted. Default is **YES**.

DISARM DISABLE
NO **YES**

Disarm/Disable

Select YES to disable the Zone Tripped message from 1101/1102/1106 Universal Transmitters (Version 108 or higher software), 1103 Universal Transmitters (Version 107 or higher), or 1122/1126/1127 PIRs during the disarmed period. When disarmed, the transmitter or PIR only sends Supervision, Tamper, and Low Battery messages to extend transmitter battery life. For transmitters, a Zone Tripped message is sent if the zone remains tripped for 20 seconds.

Select NO to always send Zone Tripped messages in addition to Supervision, Tamper, and Low Battery. Default is **YES**.

WIRELESS PIR
PULSE COUNT: 4

PIR Pulse Count

This option displays for 1122, 1126, and 1127 Wireless PIRs. Select the number of infrared pulse counts (2 or 4) the PIR will use before sending a short message. The first infrared pulse starts a timer and count. If no additional infrared pulses occur in 25 seconds, the timer and count are reset. Default is **4**.

WIRELESS PIR
SENSITIVITY: LOW

PIR Sensitivity

This option displays for 1122, 1126, and 1127 Wireless PIRs. Select the sensitivity setting for the PIR. Selecting LOW sets the PIR to operate at 75% sensitivity for installations in harsh environments. Selecting HIGH sets the PIR to maximum sensitivity. Default is **LOW**.

WIRELESS PIR PET
IMMUNITY: NO YES

Pet Immunity

This option displays for the 1122 Wireless PIR Motion Detector. Select whether or not to enable pet immunity. Selecting YES allows pet immunity for animals up to 55 pounds.

NEXT ZONE NO YES

Next Zone

Select YES to return to the ZONE NO: - option to program a new zone. Select NO to display the Alarm Action option.

1100 Series Key Fobs

For an 1100 Series Key Fob set the House Code from 1 to 50. See House Code programming in System Options. Only zones 400-449 can be programmed as 1100 Series Key Fob zones. Refer to the 1100 Series Key Fob Programming Sheet (LT-0706) supplied with the 1100XH/E Series Wireless Receiver as needed.

To operate arming and disarming properly, the Key Fob should be assigned to a User Number with appropriate area assignments, however, the User Number does not have to exist at the time the Key Fob is programmed.

The following programming continues from when Key Fob YES is selected.

```
KEY FOB USER
NUMBER: XXXX
```

Key Fob User Number

Enter the User Number used to identify the key fob user and their arming and disarming authority. Default is **blank**.

— User number 1 to 200 on XT75 Control Panels

```
USER XXXX
   NOT IN USE
```

Displays when the User Number entered does not exist in User Code programming. The key fob can be added, but the user must eventually be added to cause the key fob to operate.

```
TRANSMITTER
SERIAL#: XXXXXXXX
```

Key Fob Serial Number

Enter the eight-digit serial number found on the wireless device.

When a serial number is already programmed, the zone number displays.

```
TRANSMITTER
SUPRVSN TIME:   0
```

Key Fob Supervision Time

Press any top row key or area to select the supervision time required for the key fob zone. Press **CMD** to accept the default time. Default is **0**.

```
SELECT MINUTES:
 0            60    240
```

Press the select key or area under the required number of minutes. The key fob must check in at least once during this time or a missing condition is indicated for that zone. 1100 Series key fobs automatically checkin based on the supervision time selected for the wireless zone, no additional programming is needed. Zero (0) indicates an unsupervised transmitter.

When the panel is reset or a receiver is installed or powered down and powered up, the supervision timer restarts for all wireless zones.

```
NO. OF KEY FOB
BUTTONS: X
```

Number of Key Fob Buttons

Enter the number of buttons (1, 2, or 4) on the key fob being programmed. Default is **four buttons**.

```
BUTTON:
TOP  BTM  LFT  RGT
```

Key Fob Button Selection (Four Buttons)

This option only displays if the key fob being programmed is a four-button model. Press the select key or area under the key fob button to program. The following list identifies the default button assignments:

TOP	Arming with areas 1, 2, and 3 assigned
BTM	Disarming with areas 1, 2, and 3 assigned
LFT	Panic Alarm (PN) with no output assigned
RGT	Arming with Area 1 assigned

```
BUTTON:
TOP  BTM
```

Key Fob Button Selection (Two Buttons)

This option only displays if the key fob being programmed is a two-button model. Press the select key or area under the key fob button to program. The following list identifies the default button assignments:

TOP	Arming with areas 1, 2, and 3 assigned
BTM	Disarming with areas 1, 2, and 3 assigned

BUTTON ACTION
YYY: XXXXXXXX

Button Action

This option specifies the Button Action for an individual key fob button. The default action for the button selected is displayed. Press any select key or area to display the Button Action options. To view more options press **CMD**.

BUTTON ACTION
ARM DIS TGL STA

ARM (Arm) **-** Arms selected areas and force arms bad zones.

DIS (Disarm) **-** Disarms selected areas.

TGL (Toggle Arm) **-** Toggles arm/disarm for selected areas and force arms bad zones when arming.

STA (Status) **-** Causes the key fob LED to indicate the arm/disarm status of the system.

BUTTON ACTION
PN PN2 EM EM2

PN (Panic) - Triggers a Panic zone type alarm with no restoral.

PN2 (Panic 2) - Triggers a Panic zone type alarm with no restoral when pressed simultaneously with any other Panic 2 button. No action occurs when pressed alone.

EM (Emerg) - Triggers an Emergency zone type alarm with no restoral.

EM2 (Emerg 2) - Triggers an Emergency zone type alarm with no restoral when pressed simultaneously with any other Emergency 2 button. No action occurs when pressed alone.

BUTTON ACTION
OUT RST UN

OUT (Output) - Causes an output to turn on steady, pulse, momentary, toggle or off.

RST (Sensor Reset) - Causes the panel to perform a standard Sensor Reset.

UN (Unused) - The button is not used and performs no action.

BUTTON
PRESS TIME: XXXXX

Button Press Time

This option specifies the amount of time (SHORT or LONG) the user must press the button before the key fob sends a message to the wireless receiver. The default press time displays. Press any select key or area to set the Button Press Time for Arm, Disarm, Toggle, Status, Output, and Sensor Reset.

The Button Press Time is not programmable on Panic (PN or PN2), Emergency (EM or EM2) or Unused (UN) zones. For those zones the button press time is always two (2) seconds.

PRESS TIME:
SHORT LONG

SHORT **-** Press the button for one-half (1/2) second to send the message to the wireless receiver.

LONG **-** Press the button for two (2) seconds to send the message to the wireless receiver.

ARM/DIS AREAS

Arm/Disarm Area Selection

For Area systems, enter the areas 1 to 6, to be armed/disarmed by the Key Fob button being programmed.
For All/Perimeter systems, choose PERIM or ALL.
For Home/Sleep/Away or Home/Away systems, choose HOME, SLEEP, or AWAY.

After selecting the areas, for one-button key fobs the Zone No.: option displays. For two-button or four-button key fobs, the Key Fob Button Selection option displays to program additional buttons.

OUTPUT NO: XXX

Output Number

You can specify a relay output/Favorite to operate when OUT (Output), PN (Panic), PN2 (Panic 2), EM (Emergency), or EM2 (Emergency 2) is selected for a key fob Button Action and the button is pressed. Valid range is 1 to 4, 450-474 (slow), 480-499 (fast), and F1-F20. For an output turned on by a PN, PN2, EM, or EM2 button action, the output turns off when any area is disarmed.

To enter an output number, press any select key or area followed by the output number. Press **CMD**.

OUTPUT ACTION:
yyy: XXXXXXXX

Output Action

This option allows you to define the output action for the selected output number. The default is Steady.

OUTPUT ACTION?
STD PLS MOM TGL

STEADY - The output is turned on and remains on.

PULSE - The output alternates one second on and one second off.

MOMENTARY - The output is turned on only once for one second.

TOGGLE - The output alternates between the on state and off state. Each button press toggles the output state.

OUTPUT ACTION?
OFF

OFF - The output is turned off. If programmed, the output was turned on by some other means such as another button press, a zone action, or a schedule.

When the output is assigned to PN/PN2 or EM/EM2 button action and is turned on, the output turns off when any area is disarmed.

When the output action is steady, pulse, or toggle and the output is turned on, the output remains on until:

- the output cutoff time expires
- the output is reset from the keypad menu
- toggled off

ALARM ACTION . . . .

Alarm Action

The Alarm Action section allows you to change or confirm the default alarm characteristics of a zone type.

If you selected the non-24-hour zone type Blank, Night, Day, Exit, Auxiliary 1, or Auxiliary 2, the Alarm Action programing begins with Disarmed Open.

If you selected the 24-hour zone type Fire, Panic, Emergency, Supervisory, or CO, the Alarm Action programming begins with Armed Open.

When a Fire Verify zone is placed into shorted condition, the panel performs a Sensor Reset and does not send a report. If any Fire Verify or Fire zone initiates an alarm within 120 seconds after the reset, an alarm is indicated. If an alarm is initiated after 120 seconds, the cycle is repeated. If no other Fire Verify or Fire zone is tripped within 120 seconds, a zone fault report is sent to the receiver.

DISARMED OPEN

Disarmed Open

This option defines the action taken by the panel when the zone is opened while the area is disarmed. There are three actions to define:

- Message to Transmit
- Output/Favorite Number
- Output Action

MSG: TROUBLE
A T L -

D S

Message To Transmit

ALARM - Selecting **A** allows an alarm report to be sent to the receiver and the bell output to activate according to zone type. See the Bell Action section. The zone name appears in the panel's alarmed zones status lists.

TROUBLE - Selecting **T** allows a trouble report to be sent to the receiver and the zone name to appear in the panel's alarmed zone status lists.

LOCAL - When you select **L**, an alarm report is NOT sent to the receiver. The bell output still activates according to zone type and the zone name appears in the panel's alarmed zones status lists.

– (dash) - When you select **–** , reports are NOT sent to the receiver. The bell output does not activate and there is no display in the panel's alarmed zones status list. Only the programmed Output Number activates.

DOOR PROPPED - Select **D** for the ENTRY DLY 2 in the System Option section to begin to count without displaying on keypad. If the time expires and the zone has not returned to normal, the keypad trouble buzzer starts and CLOSE THE DOOR appears on the keypads programmed into the PREWARN ADDRESS section. The time programmed into ENTRY DLY 2 begins to count down again internally. If the time expires a second time, and the zone has not returned to normal, the output (if programmed in zone information) triggers, and a fault report is sent to the receiver and the zone name - OPEN message displays on the keypads until a code is entered.

SENSOR RESET - When the zone state changes, the bell is silenced, a Sensor Reset is performed, and a Alarm Bell Silenced Message (S34) is sent.

OUTPUT NO: 0

Output Number

You can specify any of the outputs/Favorites on the XT75 to be activated by a zone condition. The output/Favorite can be activated regardless of the report to transmit or whether or not the zone is programmed as local.

To enter an Output Number, press any select key or area followed by the output number 1 to 4, 450-474 (slow), 480-499 (fast), F1-F20, or D01-D08. Press **CMD**.

OUTPUT: NONE

STD PLS MOM FOLW

Output Action

Entering an Output Number displays this option that allows you to assign an output action to the relay.

STEADY - The output is turned on and remains on until the area is disarmed, an output cutoff time expires, or the output is reset from the keypad User Menu.

PULSE - The output alternates one second on and one second off until the area is disarmed, an output cutoff time expires, or the output is reset from the keypad User Menu.

MOMENTARY - The output is turned on only once for one second.

FOLLOW - The output is turned on and remains on while the zone is in an off normal, or bad condition. When the zone restores, the output is turned off.

After you have selected the Message To Transmit, the display prompts you for the same three selections for Disarmed Short, Armed Open, and Armed Short conditions. If the zone is a 24-hour type, only the Armed Open and Armed Short conditions are displayed. When you have programmed all of the zone conditions, the Swinger Bypass selection is then displayed.

SWGR BYP NO **YES**

Swinger Bypass

Selecting **YES** allows the zone to be bypassed by the panel according to the programming in the Swinger Bypass Trips and Reset Swinger Bypass sections in System options . The Bypassed zone displays in the keypad Status List. Selecting **NO** disables swinger bypassing for this zone.

How it works:

If within one hour, a zone trips the total number of times as specified in Swinger Bypass Trips, the panel bypasses it until the following conditions occur; the area in which the zone is assigned is disarmed, the zone is manually reset through the Bypass Zones keypad User Menu function, the zone remains normal for one hour and the Reset Swinger Bypass is YES.

If the zone trips fewer than the specified times within one hour of the first trip, the bypass trip counter returns to 0 (zero).

A report of the swinger bypass is sent to the receiver if Bypass Reports is YES.

PREWARN KEYPADS:

Prewarn Keypads

Option is only shown for an Exit zone.

At the start of the entry delay, all keypad addresses display ENTER CODE: - . If you want the prewarn to sound at all addresses, leave the default as shown.

To delete an address, press the matching number on the keypad. To disable prewarning at all keypads, press a top row key to clear the addresses shown. Press **CMD** when the address selection is complete.

CHIME: DOORBELL

Chime

Option is only shown for Night, Exit, and Instant zones. Select either **NONE**, **DB** (doorbell), **DESC** (descend), or **ASC** (ascend) to assign that tone to a zone. Default is **DOORBELL** for Exit zones and **NONE** for Night zones.

ENTRY DELAY: 1

Entry Delay

Option is only shown for an Exit zone. Select the entry delay timer for this zone. Entry delay timers 1 and 2 are programmed in Entry Delay in System Options.

CRS ZONE NO YES

Cross Zone

Select YES to enable cross-zoning for this zone. Cross-zoning requires this zone to trip twice, or this zone and another cross-zoned zone to trip, within a programmed time before an alarm report is sent to the receiver. To operate correctly, all cross-zone zones need to be programmed as the same zone type.

When a cross-zoned zone trips, the Output action assigned to the zone activates. See the Bell Action section. The cross-zone time specified in System Options begins to count down. See the Cross-Zone Time section. If another cross-zoned zone in the system faults, or if the first zone restores and faults again before the cross-zone time expires, the bell turns on and the panel sends an alarm report.

If no other cross-zoned zone in the system trips before the cross-zone time expires, the panel sends only a fault report from the first zone to the receiver.

If CRS ZONE is YES, a valid CRS ZN TIME must be programmed for this feature to be enabled.

Cross-zoning is not compatible with Fire Verify zone types. You cannot enable cross-zoning for Fire Verify zones.

PRIORITY NO YES

Priority

Selecting **YES** allows you to provide additional protection for a zone by requiring it to be in a normal condition before its assigned area can be armed. A priority zone cannot be bypassed.

A Priority zone not in a normal condition cannot be armed. If a user attempts to arm the area, the keypad displays the bad zone name followed by PRIORITY ZONE and the arming is stopped.

ZONE REAL TIME
STATUS **NO** YES

Zone Real-Time Status

Selecting **YES** allows Real-Time Status reports, such as Door Open or Closed with zone number, to be sent using PC Log reporting. Selecting **NO** disables Real-Time Status for this zone. Default is **NO**.

TRAFFIC COUNT
NO YES

Traffic Count

This option is only displayed for NT and EX type zones. Select **YES** to provide reporting to the receiver of the number of zone trips while in a disarmed state. The number of trips will be included with the area closing message and reported to the central station automation system. Traffic Count data for the 10 lowest numbered zones with Traffic Count set to YES is also sent to the Virtual Keypad ™ App if enabled at Dealer.securecomwireless.com. Default is **NO**.

ZONE AUDIT DAYS:

Zone Audit Days

Enter the number of days (0 to 99) allowed to elapse without the zone being tripped before a fault message is sent. The message is sent to the receiver(s) programmed to receive Supervisory/Trouble Reports at 10:00 am following the expiration of the timer. Each time the zone is tripped, the Zone Audit Days timer restarts and begins to countdown the number of days programmed. After the countdown expires, a fault message is sent and the Zone Audit Days timer restarts and begins to countdown the number of days programmed. Available for all zone types except Fire and Fire Verify. Enter 0 (zero) to disable this function. Default is **0 (zero)**.

ZONE NO: -

Zone Number

Enter the zone number you want to program next. Return to the beginning of this section and follow the descriptions of each programming option. If all zones are programmed, press the ARROW key at the ZONE NO: – display to continue.

STOP

STOP

Stop

At the STOP option, pressing any select key or area allows you to exit the Programmer function of the panel. When selected, the panel performs an internal reset and exits the programmer.

The STOP routine causes the following conditions to occur:

- All current programming is saved
- All 1100 Series DMP Wireless transmitters are reset to NORMAL
- The panel Status List is cleared

During the reset, all keypad displays are momentarily blank for two seconds. After the reset, the programming function terminates and the keypads return to the status list display.

The STOP option does not disarm the system. Any new areas or zones that were added during programming are not armed until the system is disarmed and armed again.

SET LOCKOUT CODE

SET LOCKOUT CODE

Set Lockout Code

Pressing **CMD** at the Stop option displays SET LOCKOUT CODE. This feature allows you to program a special code that will then be required to gain access to the panel's internal Programmer through the keypad.

Changing the Lockout Code
You can change this code at any time to any combination of numbers from 1 to 5 digits long (1 to 65535). Do not use leading zeros for the lockout code.

1. Press any select key or area. The display changes to ENTER CODE: - .
2. Enter a 1- to 5-digit code (do not enter a number higher than 65535). Press CMD.
3. Enter the new Lockout Code again. Press CMD. The keypad display changes to CODE CHANGED.

Once you have changed the code, it is important that you write it down and store it in a safe place. Lost lockout codes require the panel to be sent back into DMP for repair. You may cancel a Lockout Code by entering 00000 at the Set Lockout Code command option.

Lockout Code restriction:

Do not set a Lockout Code higher than 65535.

APPENDIX

This section of the XT75 Programming Guide provides additional zone and system information.

Status List

The Status List is the current status of the system or records of recent system events that display on alphanumeric keypads or in Virtual Keypad.

If an event were to occur on the system, such as an AC failure, the keypad would also display the AC POWER -TRBL message. This is a system event that is placed into the Status List to alert the user to a problem with the system.

Some Status List items remain in the display until manually cleared and some are cleared automatically when the condition returns to normal. Below is a list of status and event displays the keypad can show in the Status List followed by whether or not they should be manually cleared:

- Fire, Carbon Monoxide, and Supervisory zone alarms: Yes, by Sensor Reset.
- Fire, Carbon Monoxide, and Supervisory zone troubles: No, clears when zone restores
- Burglary zone alarms: No, clears at disarming.
- All other zone alarms: No, clears when zone restores
- Zone monitor displays: No, clears after approximately 8 minutes
- Day zone alerts: No, clears after approximately 8 minutes
- System monitor trouble: No, clears when condition restores (AC and battery trouble)
- Armed status display: No (System On)
- Disarmed status displays: No (System Ready, System Not Ready)
- Remote keypad messages: No (Sent to the keypad by your office or central station)

Each item in the list is displayed for four seconds. When there are multiple items in the list, you can use **CMD** or the Back Arrow key to scroll forward or back through the items.

False Alarm Reduction

System Recently Armed Report

The System Recently Armed report (S78) is sent when a burglary zone goes into alarm within two minutes of the system being armed.

Diagnostics Function

Note: If you enter **2313** (DIAG) and **NO AUTHORITY** displays, ensure **SERVICE USER** is set to **YES** in the **USER MENU**.

The XT75 contains a Diagnostics function that allows you to test the integrity of the cellular communication and cellular signal. The Diagnostics function also displays the panel settings. To use Diagnostics, reset the panel, enter the Diagnostics code **2313** (DIAG), and press **CMD**. When **DIAGNOSTICS** displays on the keypad, press any select key or area to enter the menu.

TEST LX-BUS

Test LX-Bus

This function allows you to test the ability of the panel to communicate with zone and output expander modules connected to the LX-Bus circuits.

ADDRESS:

The keypad now displays ADDRESS: - . Enter a 2-digit LX-Bus device address and press **CMD**. When testing LX-Bus devices, enter only the addresses to which the modules have been set. Press any select key or area when TEST LX-BUS displays. A device address is not the same as a zone number. If you are testing 714 or 715 Zone Expander Modules, which each contain four zones, the device address is the first zone number. When the panel polls a 714 on the LX-Bus, it recognizes it as a four zone device and does not poll the remaining three zones. The 714 module internally polls the remaining zones and transmits any status changes to the panel. This greatly reduces the amount of time it takes the panel to poll all LX-Bus devices.

TESTING... STOP

The keypad next displays TESTING . . . STOP during the device testing. At any time, you can select STOP to end polling. The panel records the number of no responses from the device. If all polls are received back by the panel correctly, the keypad displays 00000/65535 FAIL.

If one or more polling attempts fail, the keypad displays * * * * */65535 FAIL with the * representing the number of failed polling attempts. A display of 65535/65535 FAIL indicates a problem with the interface card or its LX-Bus wiring such as a bad or broken wire, harness not properly connected, or excessive noise or distance. It can also mean that a zone number was entered that did not match a device address. Press the Back Arrow key to enter a new device address or press **CMD** to exit the TEST LX-BUS.

ZONE FINDER

Zone Finder

This function allows you to identify individual zones on devices connected to the LX-Bus of an interface card, the panel, or any zones on the keypad data bus. To use ZONE FINDER, press any select key or area.

FAULT ZONE

The display changes to FAULT ZONE. The next zone on the system that changes from a normal to an open or shorted state is displayed as ZONE NO: * * *. To continue, press the Back Arrow key.

ZONE STATE

Zone State

This function allows you to enter any zone number and check its current electrical state: Normal, Open, or Shorted). Press any select key or area.

ZONE NUMBER:

The display changes to ZONE NUMBER: _ . Enter in the zone number you want to check and press **CMD**. The panel displays the current state of the zone as NRML (normal), OPEN, or SHORT.

LX-BUS STATUS

LX-Bus Status

This function allows the panel to poll all devices connected to the LX-Bus of an interface card and check for any Overlapped, Missing, or Extra addresses. Below is a description of each status item:

OVLP MIS EXT

Overlap (OVLP): An overlap occurs when one device address is the same as any of the last three zones on another 714 or 715. The overlap feature cannot determine when two devices have the same address.

Missing (MIS): A missing occurs when a zone between 500 and 599 has been programmed in ZONE INFORMATION and no device with that zone address has been installed on the LX-Bus. To correct the problem, check your zone programming and zone expansion module addressing.

Extra (EXT): A device is installed on the LX-Bus but none of its zones are programmed into the system.

X-BUS

RECEIVER VERSION

X-Bus

This option displays the firmware version for the connected external wireless receiver. Press any select area to display the receiver version.

MAC ADDRESS

MAC Address

The MAC (Media Control Access address) uniquely identifies each network node. This is different from an IP address, which is assignable. In the Diagnostics function, the MAC address is the panel on-board network hardware address. Press any select key or area to display the panel MAC address.

SERIAL NUMBER

Serial Number

This number is the network communicator serial number. Reference this number for communicator date-of-manufacture, hardware version, etc. Press any select key or area to display the Serial Number.

LOADER VERSION

Loader Version

This display is for factory use only. Press any select key or area to display the factory Loader Version.

ATT VZW BOTH

Carrier Selection

This option is only available when DualSIM is active. In the event that remote connectivity is unavailable, carrier options can be manually switched on the keypad. To select a single carrier, press **ATT** or **VZW**. To use DualSIM operation, select **BOTH**.

Signal Strength Test

If DualSIM is activated, the panel automatically selects a primary carrier (AT&T or Verizon) when the panel is turned on. Once the primary is established, the panel tests the signal strength of the primary every hour. During the test, if the primary's signal drops by 10db or more, the panel then tests the backup carrier. If the backup has a stronger signal, it becomes the new primary. Every five hours, the panel automatically tests the backup's signal strength to determine the stronger signal.

COMM STATUS

PATH: -

Communication Status

This option tests the individual components of cellular or network communication.

The display changes to **PATH: -**. Enter in the communication path you want to check and press **CMD**. Entry into the COMM STATUS menu prompts each component of the panel's cellular or network communication to be tested.

Note: If DualSIM is active, an option to select **ATT** or **VZW** appears before testing proceeds. Select one of the carriers to test it.

The test proceeds until the first component failure is detected or until all components have been tested with positive results. The test screen displays after each component is tested and displays for two seconds or until CMD has been pressed. The following results may display:

Cellular Results

SUCCESSFUL DISPLAY	FAILURE DISPLAY
MODEM OPERATING	NO MODEM FOUND
IDENTIFIED	NO SIM CARD
TOWER DETECTED	NO SIGNAL
REGISTERED	NOT REGISTERED

SUCCESSFUL DISPLAY	FAILURE DISPLAY
APN ACCEPTED	APN ERROR
	NOT ACTIVATED
CELL COMM GOOD	NO ACK RECEIVED

Network Results

SUCCESSFUL DISPLAY	FAILURE DISPLAY
LINK OK	LINK ERROR
DHCP OK	DHCP ERROR
GATEWAY FOUND	NO GATEWAY
DEST FOUND	NO DESTINATION
COMM PATH GOOD	NOT CONNECTED
	NO ACK RECEIVED

CELL SIGNAL

-XX dBm
SIGNAL: ▌▌▌▌▌▌▌▌

Cellular Signal Strength (CELL SIGNAL)

This option provides a way to test the cellular signal strength of the nearest tower for the SIM card carrier. Press any select key or area to display cell signal strength. The X's represent the numerical value of the cell signal strength in -dBm. The ▌'s represent the signal strength 0-7.

Z-WAVE INFO

TEST Z-WAVE

DEVICE LIST:
HALLWAY LIGHT

HALLWAY LIGHT
99/99 SUCCESSFUL

Z-Wave Info

This menu option displays the Firmware Version number of the panel and date it was released.

This feature allows the installer to test panel communication with Z-Wave devices. A successful test indicates a response from a device. Press any select key or area to view the Z-Wave Device List.

Press **CMD** to advance through each Z-Wave device and press any select key or area to begin the test on the device displayed.

The name of the device displays above the device number. The current number of successful communications followed by the total number of attempts displays to the right of the device number. The test stops after 99 attempts.

INIT Z-WAVE

Z-WAVE? NO YES

INIT SUCCESSFUL

Initializing Z-Wave Defaults

Note: Only use this option when the Z-WSave network primary controller is missing or otherwise inoperable.

Select **YES** when Z-WAVE? NO YES displays. **INIT SUCCESSFUL** displays when all Z-Wave programming has been initialized.

WIFI SIGNAL

Wi-Fi Signal Strength (Wi-Fi SIGNAL)

This option tests the signal strength of the selected SSID. Press any select key or area to display Wi-Fi signal strength. The ▌'s represent the signal strength 0-7.

WI-FI SIGNAL STRENGTH	
Number of Bars	Indication
7	Good Signal (Excellent for consistent operation)
6	
5	
4	Average Signal (Expect consistent operation)
3	
2	
1	Weak Signal (Will not operate reliably. Relocate Wi-Fi equipment or add a Wi-Fi extender for better reception.)
0	No Signal

STOP

Exiting the Diagnostics Program

Press **CMD** until STOP displays. Press any select key or area. The keypad returns to the Status List display.

Using the Walk Test

The XT75 panel provides a walk test feature that allows a single technician to test all the protection devices connected to zones on the system. Conduct the Walk Test within 30 minutes of resetting the panel. The Walk Test automatically ends if no zones are tripped for 20 minutes. TEST IN PROGRESS displays at all keypads programmed with the same Display Areas features. When five minutes remain, TEST END WARNING displays. The Walk Test only tests zones assigned to the areas programmed into the keypad in Display Areas. If any areas are armed, the Walk Test does not start and SYSTEM ARMED displays.

If the Panic Supervision option is enabled in SYSTEM OPTIONS, the panic button on any programmed key fob can be tested during the Walk Test. When the panic button is pressed, the receiver sends a verification message.

WALK TEST

Walk Test

To conduct the Walk Test, reset the control panel by momentarily placing a jumper on RESET then wait one minute. From the keypad, enter the code 8144. The keypad displays WALK TEST. If the system is monitored and the communication type is DD or NET, the system sends a System Test Begin report to the central station. All programmed zones are included in the test.

BG FI PN SV

Zone Types

Select the zone type you want to test. An asterisk next to the zone type indicates the zone type chosen for testing. Press the select key or area again to deselect the zone type. When you have selected all the zone types you want to test, press **CMD** to display the next Walk Test option.

BG (Burglary Zones) - Select **BG** to test hardwired burglary zones. This includes all NT, DY, EX, A1, and A2 zones.

FI (Fire zones) - Select **FI** to test hardwired fire zones. This includes all FI and FV zones.

PN (Panic zones) - Select **PN** to test hardwired panic zones. This includes all PN and EM zones.

SV (Supervisory zones) - Select **SV** to test hardwired supervisory zones. This includes all SV zones.

During the Walk Test, trip each zone device or button on the system for 1 to 2 seconds.

Note: You do not have to hold the zones for 2 seconds in normal mode for PN type zones. You are only required to hold the panic during the Walk Test because the zone takes additional time to report when the system is in test mode.

WLS PIR

WLS (Wireless Test) - Select **WLS** to automatically test wireless transmitter communications. This includes all wireless devices except key fobs and transmitters programmed for a supervision time of 0 (zero).

Note: Wireless Test operation only displays when the panel is connected to 1100XH Wireless Receiver Version 105 or higher.

PIR (Wireless PIR Walk Test) - The PIR Walk Test allows the installer to verify the 1122, 1126, or 1127 operation. When enabled, the PIR LED flashes each time motion is detected for up to 30 minutes. This is a local test only and no messages are sent to the monitoring center.

BELL NO YES PULS

Bell Action

This option selects the bell output action when a zone in testing mode faults. This option allows the panel bell, burglary bell, and fire bell to turn ON and then OFF each time a zone is tripped (opened or shorted).

NO - Select **NO** for no bell output action to occur during the Walk Test.

YES - Select **YES** to turn on any bell output for 2 seconds during the Walk Test.

PULS - Select **PULS** to turn on any bell output for 1/4 second during the Walk Test. Any LX-Bus device output turns on for 1.65 seconds due to the polling cycle.

```
WALK TEST
TRIPS: XXX        END
```

Trip Counter for Walk Test (STD)

Once the walk test is enabled, walk around and trip each protective device. Continue tripping devices until the entire system is tested.

During each zone trip in the Walk Test, the following actions occur:

- The keypad displays increments each time a selected zone is opened or shorted
- The panel sounds the alarm bells as programmed in Bell Action
- Each time a FI, FV, SV zone trips, a Sensor Rest occurs

If ENHANCED ZONE TEST is selected as YES, a Verify message is sent at the time the zone trip occurs, instead of at the end of the Walk Test.

For FI, FV, SV, or CO zone types, the Very message is sent at the initial trip.

For all other zone types, the Verify message is sent when the zone restores. This allows the monitoring center to count the number of devices per zone.

END - Select **END** to stop the Walk Test. When the Walk Test ends or a 20-minutes time-out expires, a final sensor reset occurs. The System Test End message sends to the receiver, along with Verify and Fail messages for each zone under test. Faulted zones display on the keypad.

```
IN PROGRESS XMIN
CHKIN: cc/tt    END
```

Trip Counter For DMP Wireless Test (WLS)

This option displays the number of wireless zones that automatically communicate a supervisory check-in message. The test runs for a total of 5 minutes. During the 5 minutes, the transmitters are tested multiple times, and a timer displays on the keypad to indicate that the test is in progress. In order for a transmitter to pass, it needs to check in 3 or more times. At the end of the 5 minutes, the results display on the keypad, including which transmitters failed the test.

```
CKIN: XXX/ZZZ        END
```

The keypad displays the following information:

- The total number of wireless zones programmed for supervision that should check in. (ZZ in the example).
- The number of zones that check in. (XX in the example).

END - Select **END** to stop the Wireless Test. When the test ends or a 5-minute time-out expires, normal wireless zone processing returns. If all transmitters check-in, both numbers match within 5 minutes. If a transmitter has multiple zones, all zones are included in the counts. Failed wireless zones display on the keypad.

```
TEST END WARNING
```

Test End Warning

When no zones have been tripped and five minutes remain on the 20-minute Walk Test timer, the keypad displays TEST END WARNING and the keypad tones. If no additional test zone trips occur, the test ends and a final sensor reset automatically occurs. The System Test End message is sent to the receiver, along with Verify and Fail messages for each zone under Walk Test. Faulted zones display on the keypad.

Key fobs do not send failure messages in order to prevent functioning key fobs that are not present at the time of the test from being reported MISSING.

```
SOUTH LOBBY
ZONE: 10          -FAIL
```

Failed Zones Display

Each zone that did not trip (failed) at least once during the Walk Test, except for key fobs, displays on the keypad that initiated the test. Any Fire (FI), Panic (PN), Supervisory (SV), or Carbon Monoxide (CO) 24-hour zone that is faulted at the end of the Walk Test displays a trouble condition for that zone regardless of the message programmed for the open or short condition of the zone. A zone trouble is also sent to the receiver. Press **CMD** to display the next failed zone.

For the Wireless Test, failed wireless zones only display on the keypad. Zone Verify/Fail Reports are not sent to the monitoring center receiver for the Wireless Test.

KEYPAD SPEAKER OPERATION

The panel provides distinct speaker tones from the keypad for Fire, Burglary, Zone Monitor, Carbon Monoxide (CO), and Prewarn events. The list below details the conditions under which the speaker is turned on and off for each event.

CROSS ZONING

Caution must be taken when cross zoning devices to ensure that the Cross Zone Time is long enough to allow an intruder to trip both devices before it expires. A Cross Zone Time that is too short may allow an intruder to trip the devices and allow only a zone fault report be sent to the central station.

When a Cross Zoned zone trips, a FAULT report is sent to the SCS-1R or SCS-VR Receiver. When two Cross Zoned zones trip within the Cross Zone Time, both zones send ALARM signals to the receiver. For example, if zones 1 and 2 are Cross Zoned zones, and only zone 1 trips, a FAULT report is sent to the receiver for zone 1. If zone 1 trips and zone 2 trips within the Cross Zone Time, an ALARM report is sent to the receiver for zone 1 and zone 2.

To operate correctly, all cross-zone zones need to be programmed as the same zone type.

ZONE TYPE DESCRIPTIONS

This section describes applications for the zone types in Zone Information programming.

NT (Night zone) - Controlled instant zone used for perimeter doors and windows and interior devices such as PIRs and glassbreak detectors.

DY (Day zone) - Used for emergency doors or fire doors to sound the keypad buzzer and display the zone name when the zone is faulted. Day zones also will send alarm reports to the receiver during the system's armed periods.

EX (Exit zone) - Initiates the entry delay timer when its assigned area is fully armed. Also, can initiate an exit delay timer to allow a user to exit an area after the arming process has started.

PN (Panic zone) - Used for connecting to mechanical devices that allow a user to signal an emergency alarm. Panic zones can provide either a silent or audible alarm with or without reporting to a central station receiver.

EM (Emergency zone) - These are used for reporting medical or other non-panic emergencies to the central station.

SV (Supervisory zone) - Used to provide 24-hour zone supervision. Typical applications are high water, and low and high temperature gauges.

FI (Fire zone) - Used for any type of powered or mechanical fire detection device. Typical applications are for smoke detectors, sprinkler flow switches, manual pull stations, and beam detectors.

FV (Fire Verify zone) - Used primarily for smoke detector circuits to verify the existence of an actual fire condition. When a Fire Verify zone initiates an alarm, the panel performs a Fire Reset. If any Fire zone initiates an alarm within 120 seconds after the reset, an alarm is indicated. If an alarm is initiated after 120 seconds, the cycle is repeated.

A1 and **A2** (Auxiliary 1 and Auxiliary 2) - These zones are typically used to protect restricted areas within a protected premises. Auxiliary 2 zones do not appear in the Status List.

AR (Arming zone) - This zone allows you to connect a keyswitch to a zone and use it to arm and disarm the system.

CO (Carbon Monoxide) - Used for carbon monoxide detection devices.

IN (Instant) - This provides a zone that does not follow entry to exit zones. Choose Instant if you need a zone that will not follow Entry or Exit delay.

DB (Doorbell) - This zone type is intended for use for zones that are assigned to doorbell cameras.

HU (Holdup zone) - Used as silent panics, which do not trigger audial or visual alerts on the keypad.

COMMON KEYPAD MESSAGES

MESSAGE	MEANING	POSSIBLE SOLUTIONS
INVALID CODE	The user code you have entered is not recognized by the system.	Check the user and try again.
CLOSING TIME	The schedule has expired but the system has not been armed.	Users still on the premise should arm the system or extend the schedule to a later time.
KEYPAD NAME - NO PWR	Keypad is not getting proper power.	Check that AC/DC transformer is plugged in correctly.
AC TROUBLE	The system AC is low or missing.	Check that the AC connections are good.
BATTERY TROUBLE	The system battery is either low or missing.	Check that the battery connections are good and the battery is still good.
SYSTEM TROUBLE or SERVICE REQUIRED	There is a problem with one or more components in the system.	Make sure the RESET jumper is removed from the panel. Make sure there is not a short or open condition on the green data wire to the keypad. You may also need to check that all of the keypads and expansion modules on the bus are good.
SYSTEM BUSY	The system is performing another task with a higher priority.	Wait a few moments for the system to complete the task. Make sure the RESET jumper is not on the panel. If the message displays for a long period of time, the processor could be locked up.
TRANSMIT FAIL	The panel has attempted to communicate with the Monitoring Center 10 times and has not suceeded.	Verify your communication type, account number, and phone number. Make sure the telephone line is connected and working properly.
ENTER CODE (when entering Programming)	A lockout code has been programmed for the panel.	Enter the lockout code.
WIRELESS TROUBLE	The panel is unable to communicate with the wireless receiver.	Verify the receiver is properly connected to the panel. Verify the correct receiver is selected in System Options (internal or external).
	The wireless receiver is missing.	

TROUBLESHOOTING

This section provides troubleshooting information for use when installing or servicing an XT75 system.

PROBLEM	POSSIBLE CAUSE	POSSIBLE SOLUTIONS
Keypad displays “SYSTEM TROUBLE”	RESET Jumper is installed.	Remove the RESET reset jumper.
	Open or short on the green data wire to the keypad.	Check for broken or shorted wires between the panel and the keypad.
	Bad keypad or zone expander is affecting the Green data wire.	Replace keypad or zone expander.
Keypad keyboard is not functional. When a key is pressed, only a short beep is emitted.	Open or short on the yellow data wire to the keypad.	Check for broken or shorted wires between the panel and the keypad.
	Bad keypad or zone expander is affecting the Yellow data wire.	Replace keypad or zone expander.
Keypad XMIT Green LED is off	Panel is reset.	Remove RESET jumper.
	Flash Load enabled.	Remove LOAD jumper and reset panel.
Keypad RCV Yellow LED is off	Keypad/expanders are not connected to panel.	Connect keypad/expanders.
	Keypad/expanders are greater than eight.	Check keypad/expanders address.
Keypad beeps when keys are pressed, but will not allow the user to arm or disarm, or enter the User Menu.	Two or more keypads are assigned to the same address.	Set each keypad on the system to a unique address.
Power LED is off.	AC/Battery is not connected.	Connect AC power and/or battery.
Wireless Green TX LED is off.	Wireless House Code is not programmed.	Program House Code in System Options.
Wireless Yellow RX LED never flashes.	Transmitters are not getting through to receiver.	Check transmitter serial numbers.
		Move transmitter closer.
		Replace 1100 series receiver.
Wireless Green TX and Yellow RX LEDs are both on steady	Panel is reset.	Remove RESET jumper.
	Flash Load enabled	Remove LOAD jumper and reset panel.
Keypad operates intermittently, keystrokes may be missed, or display does not update consistently.	Wire length may exceed maximum, resulting in poor data performance.	Wire length can be reduced or a heavier gauge used.
		A power supply can be added near the keypad. See LT-2031, LX-Bus/Keypad Bus Wiring Application Note for more information.

Common LCD Keypad Displays

Listed below are several keypad messages you may see on the display. Follow the instructions in the "Possible Solutions" column to correct the problem.

MESSAGE	MEANING	POSSIBLE SOLUTIONS
INVALID CODE	The user code entered is not recognized by the system.	Check the user code and try again.
CLOSING TIME	The system was not armed at its scheduled closing time.	Users still on the premise should arm the system or extend the schedule to a later time.
AC TROUBLE	The system AC is low or missing.	Check that the AC connections are good from the transformer.
BATTERY TROUBLE	The System battery is either low or missing.	Check to see that battery and connections are good.
SYSTEM BUSY	The system is performing another task with a higher priority or is being Remote Programmed.	Wait a few moments for the system to complete the task. Make sure the RESET jumper is not on the panel. If the message displays for several minutes, the keypad is not receiving polling from the panel.
TRANSMIT FAIL	The panel has attempted to communicate with the central station multiple times and has not succeeded.	Verify your communication type, account number, and phone number. Make sure the telephone line is connected and working properly.

WIRING DIAGRAMS

System Sensor 2-Wire Smoke Detectors

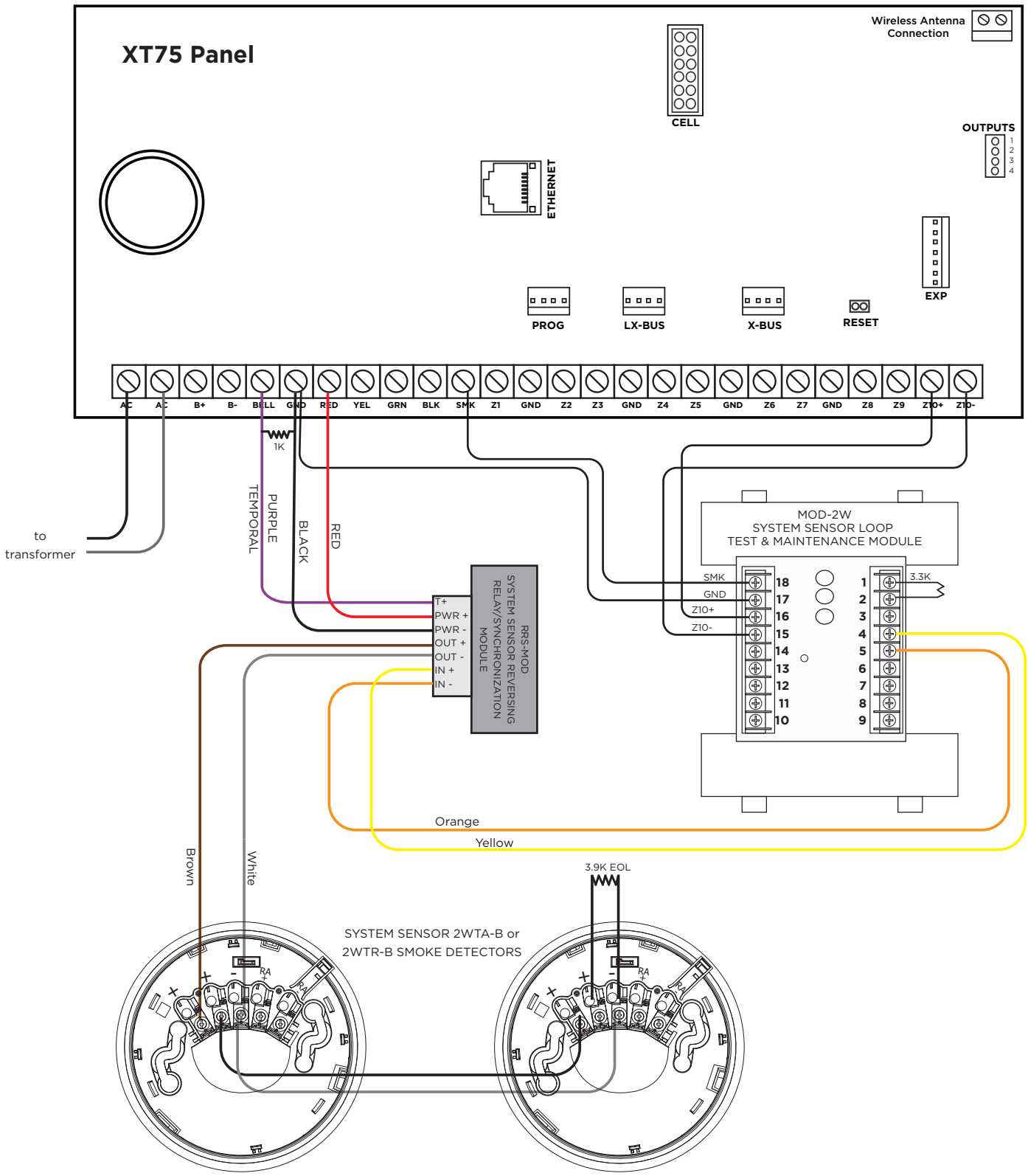

SPECIFICATIONS

Power Supply

Maximum output per circuit

Caution: Cannot exceed 2.5 Amps combined output with 50 VA transformer

Transformer Input	Plug-in — 16.5 VAC 50 VA, Model 327
Standby Battery	12 VDC, 1.0 Amps Max. charging current Models 364, 365, 366, 368, or 369 Replace every 3 to 5 years
Auxiliary Output	2 Amps
LX-Bus/X-Bus	1 Amp
Bell Output	1.5 Amps
Smoke Detector Output	.5 Amp

All circuits inherent power limited.

Note: Please see the XT75 Compliance Listing Guide (LT-2895) for certificated application requirements.

Enclosure

The XT75 ships standard in a 340 enclosure with EOL resistors, battery leads, and quick reference user guide.

MODEL	SIZE	COLOR	CONSTRUCTION (COLD ROLLED STEEL)
340	12.5 W x 9.5 H x 2.75 D in 31.8 W x 24.1 H x 7.0 D cm	Gray (G)	20-Gauge
349	12.5 W x 11.5 H x 3.5 D in 31.8 W x 29.2 H x 8.9 D cm	Gray (G)	20-Gauge
349A	13.3 W x 11.6 H x 3.6 D in 33.7 W x 29.6 H x 9.1 D cm	Gray (G)	18-Gauge with 16-Gauge door
341	13.0 W x 6.6 H x 3.5 D in 33.0 W x 16.6 H x 8.9 D cm	Gray (G)	20-Gauge

Communication

- Built-in network communication to DMP Model SCS-1R or SCS-VR Receivers
- Modular cellular communication to DMP Model SCS-1R or SCS-VR Receivers
- Modular Wi-Fi network alarm signal communication to DMP Model SCS-1R or SCS-VR Central Station Receivers.

Keypads/Expansion

- Connect up to eight supervised alphanumeric keypads per panel, seven of which can be wireless keypads.
- Connect additional unsupervised keypads: 7-Inch Touchscreen, 5-Inch Touchscreen, Thinline™, and Aqualite™ keypads
- In addition, the following zone expanders can be added:
  - One, four, eight and 16-zone expansion modules
  - Single-zone PIR and glassbreak detectors

Panel Zones

- Nine 1k-10k Ohm EOL burglary zones: zones 1 to 9
- One 3.3k ohm EOL Class B powered fire zone with reset capability: zone 10

Number of Zones

- Onboard zones 1-10
- Eight keypad bus addresses with zones 11-14, 21-24, 31-34, 41-44, 51-54, 61-64, 71-74, and 81-84.
- Zone numbers 450-474 (slow) and 480-499 (fast) can support DMP wireless output modules
- Zone numbers 400-449 can support 1100 Series Key Fobs
- Up to 50 hardwired zones numbered 500-549 and up to 100 wireless zones numbered 500-599 using the LX-Bus

Outputs

- The XT75 provides four open collector outputs rated for 50 mA each. A Model 300 Output Harness is required. The open collector outputs provide the ground connection for a positive voltage source.

Designed, engineered, and manufactured in Springfield, MO using U.S. and global components.

LT-2894 26015

© 2026

INTRUSION • FIRE • ACCESS • NETWORKS

2500 North Partnership Boulevard
Springfield, Missouri 65803-8877

800.641.4282 | DMP.com