X1 SERIES MULTI-DOOR ACCESS CONTROLLER INSTALLATION AND PROGRAMMING GUIDE

LT-2289 1.01 25272

© 2026

TABLE OF CONTENTS

X1 Series Multi-Door Access Controller Overview 1

X1 Door Controller Power 1

X1 Door Controller PCB Components 1

XD Door Control Module PCB Components 2

Door Controller Plug-In Terminals 2

Pre-Installation 3

Step 1: Mount the Door Controller 3

Step 2: Connect a Card Reader 3

Connect a Wiegand Card Reader 3

Connect an OSDP Card Reader 3

Optional Second Card Reader 3

Step 3: Wire the Inputs 4

Door Switch (DS) 4

Request to Exit (RX) 4

Custom Input (CI) 4

Ground (G) 4

Step 4: Wire the Onboard Outputs 4

Aux Output 1 & 2 (O1 & O2) 4

12V+ (12V) 4

Step 5: Wire the Electronic Lock 5

Form C Relay 5

Diode 5

Wet/Dry Jumper 5

Step 6: Determine Communication 6

Ethernet Connection 6

Cellular Connection (Optional) 6

Wi-Fi Connection 7

Step 7: Install Optional Output Module 8

X1 Output Module PCB Components 8

Mount the X1 Output Module 8

Address the X1 Output Module 9

Wire the X1 Output Module 9

Optional Additional Output Modules 10

Wire the Additional Output Modules 11

Wire the Outputs 12

Step 8: Apply Power 13

Ground the Door Controller 13

Wire AC Power 13

Wire the Battery 13

Wire the XD Door Control Modules 13

Check the Addresses of the XD Door Control Modules 14

Door Controller Wiring Example 15

XD Door Control Module Wiring Example 16

Step 9: Manage Connection Settings 17

Configure Wi-Fi Settings 17

Configure Network Settings 17

Configure Cell Settings 17

Troubleshoot SSID Broadcast 17

Step 10: Program in Dealer Admin 18

Sign In to Dealer Admin 18

Add a Customer 18

Add the X1-8 Door Controller to the Customer 18

Program the X1-8 Door Controller 19

Connect the X1-8 Door Controller to an XR Series Panel (Optional) 20

Add Card Formats 21

Add an X1 Output Module (Optional) 21

Enable Video Services 22

Add an App User 22

Log In as a Customer 22

Step 11: Test the Door Controller 23

Additional Information 23

LEDs 23

Cell Module Removal 23

Door Controller Initialization 23

X1 SERIES MULTI-DOOR ACCESS CONTROLLER OVERVIEW

The X1 Series is a cloud-based access door controller that is fully programmed in Dealer Admin™ and maintained in Virtual Keypad™. This guide will cover mounting the door controller, wiring devices to the door controller, configuring network options, applying power, programming the door controller in Dealer Admin, and testing the door controller.

X1 Door Controller Power

Powered by:	Maximum Current Draw:
Power Terminals	1.5 A

X1 Door Controller PCB Components

Refer to the diagram below throughout the installation.

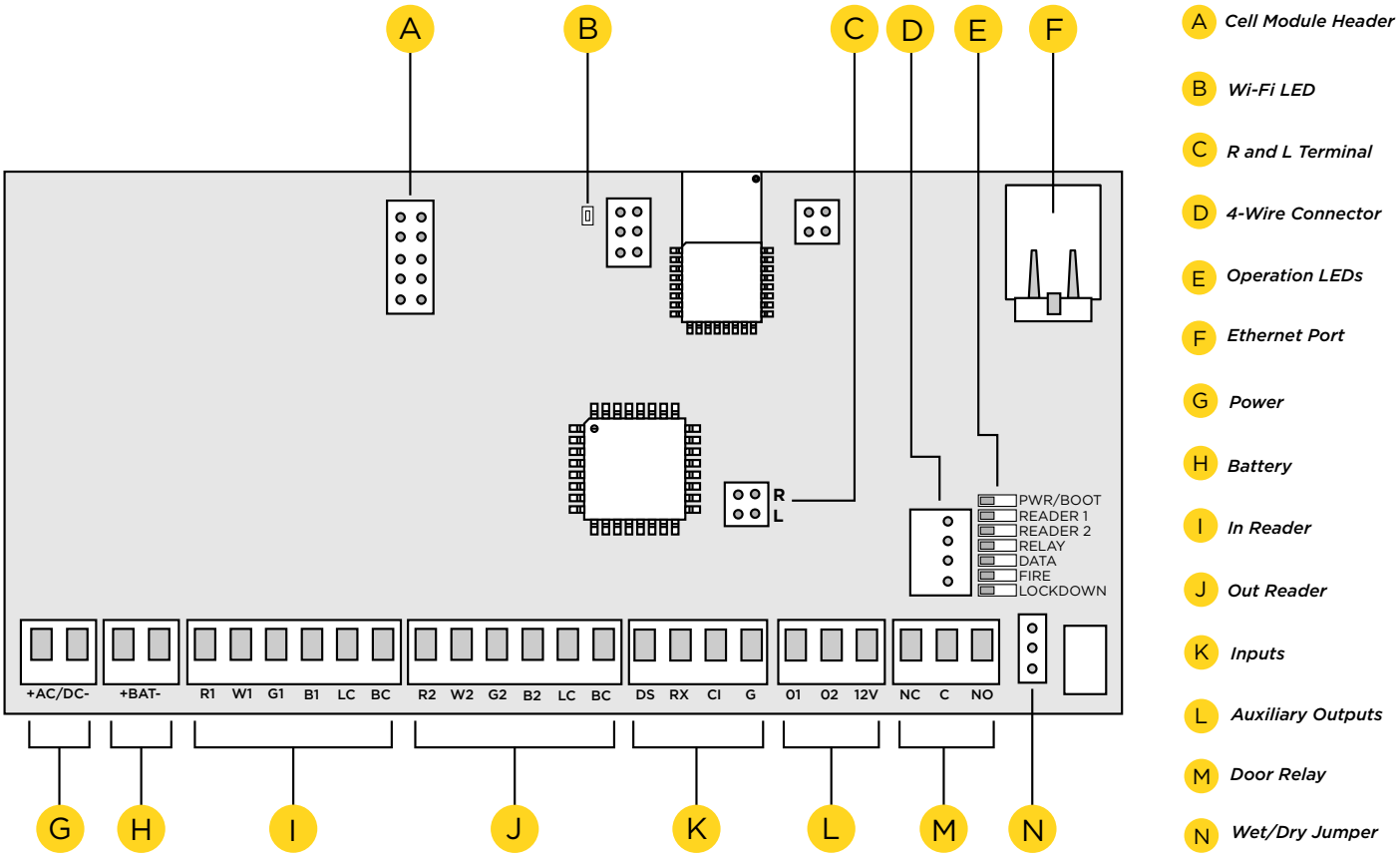

XD Door Control Module PCB Components

Refer to the diagram below throughout the installation.

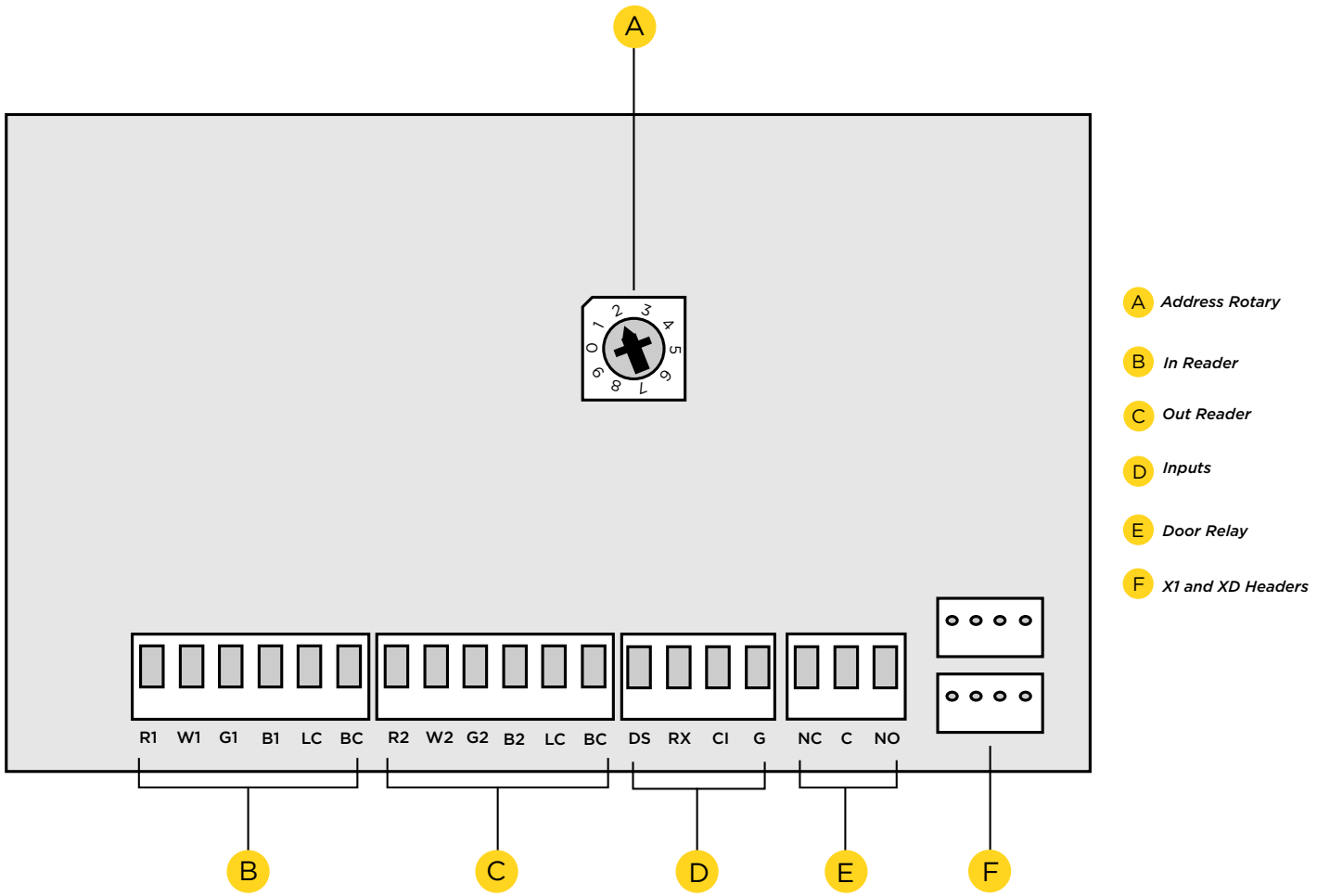

Door Controller Plug-In Terminals

Wiring terminals on an X1 Series Door Controller is done easily by using the plug-in terminals.

1. Insert the wire into the slot.
2. Tighten the screw.
3. Snap the plug-in terminal onto the door controller board.

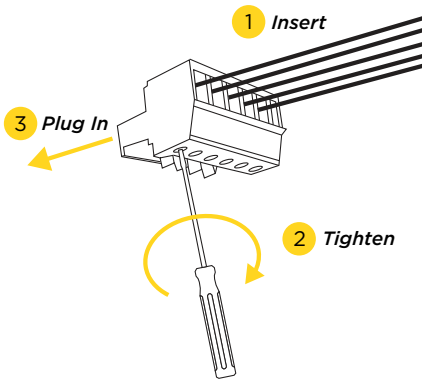

PRE-INSTALLATION

If the controller has been connected to a network prior to final installation, while connected to the network delete the controller's programming from Dealer Admin. Wait at least three minutes before disconnecting. This allows the controller to initialize and return to factory settings.

STEP 1: MOUNT THE DOOR CONTROLLER

The metal enclosure for the X1 Series must be mounted directly to a wall, backboard, or other flat surface in a secure, dry place to protect the door controller from damage. Do not remove the PCBs from the enclosure.

STEP 2: CONNECT A CARD READER

The X1 Series provides connections for 2 readers. The first reader is designated for the In Reader and the second is designated for the Out Reader.

The X1 Series Door Controller also provides direct 12 VDC output to the reader on the RED terminal connection.

Terminal Name	Wiegand Function	OSDP Function
R1 & R2	12V+	DC +
W1 & W2	Data 1	B (485 +)
G1 & G2	Data 0	A (485 -)
B1 & B2	12V- (ground)	DC -
LC	LED Control	N/A
BC	Wiegand Buzzer Control	N/A

Connect a Wiegand Card Reader

1. Connect the red wire (12 VDC) to terminal R1.
2. Connect the white wire (Data One) to W1.
3. Connect the green wire (Data Zero) to G1, black (ground) to B1.
4. Connect the orange or brown wire to LC.

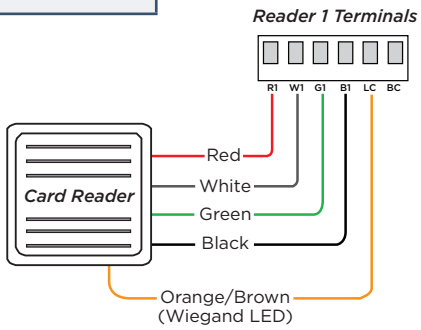

Connect an OSDP Card Reader

1. For data transmission, connect the A wire (485 –) to the G1 terminal and the B wire (485 +) to the W1 terminal.
2. For reader power, connect the red wire (DC +) to the R1 terminal and the black wire (DC –) to the B1 terminal.

Note: The wire colors may be different depending on the reader being installed. Refer to the literature provided with the reader for wire coding, wire distance, cable type (such as shielded), and other specifications. The figure above shows the DMP-preferred wiring.

Optional Second Card Reader

For an out reader, connect the red, white, green, and black wires to the Reader 2 terminals: R2, W2, G2, and B2. Connect the orange/brown wire to LC.

If using only one reader, it must be connected to reader 1.

STEP 3: WIRE THE INPUTS

Door Switch (DS)

Connect a door contact or door position switch to indicate the status of the door, whether it is open or closed. Use this terminal if enabling door prop or door force.

This terminal is a Normally Closed input.

Request to Exit (RX)

Connect a motion sensing device or a mechanical switch to provide RX capability to the door controller. RX can be used to activate the door relay. When activated the RX activates the door lock relay based on the programmed unlock time. Use this terminal if enabling forced door.

This terminal is a Normally Open input.

Custom Input (CI)

This input triggers a rule through Virtual Keypad.

This terminal is a Normally Open input.

Ground (G)

This terminal is the ground for the inputs.

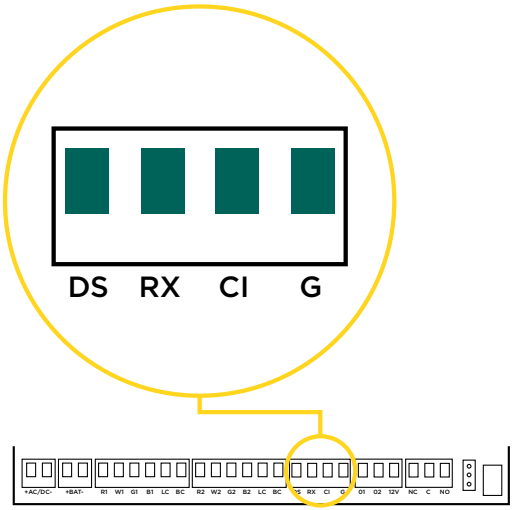

STEP 4: WIRE THE ONBOARD OUTPUTS

Use these switches to ground outputs for local outputs or door alarms such as sounders, lights, or sirens. These are 12 VDC outputs. For example, a sounder could be wired for local indication of a door prop or door force event.

Aux Output 1 & 2 (O1 & O2)

Attach the negative wire of the device here.

The relay contacts must be connected to devices located within 98.5 ft (30m) of the door controller.

12V+ (12V)

Attach the positive wire of the device here.

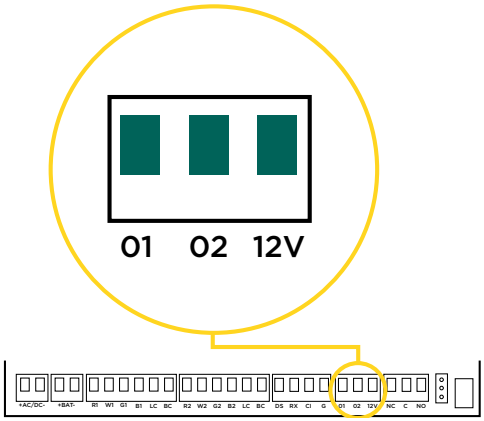

STEP 5: WIRE THE ELECTRONIC LOCK

Form C Relay

The X1 Series provides a Form C (SPDT) relay for controlling locks and other electronically-controlled barriers. The three relay terminals marked NO C NC allow you to connect the device wiring to the relay for module control.

The Form C relay draws up to 35 mA of current and contacts are rated for 1 Amp (resistive) at 12 VDC. When connecting multiple locks to the Form C relay, the total current for all locks cannot exceed 1 Amp. If the total current for all locks exceeds 1 Amp, problems will arise, it will not work as intended, and an isolation relay will be required.

Diode

Connect the included diode as close to the magnetic lock or door strike as possible to prevent inductive kickback. Observe polarity when connecting the diode.

Wet/Dry Jumper

Putting the jumper on the top two terminals will place it in the dry condition and putting the jumper on the bottom two terminals will place it in the wet condition. When using a dry relay, a power supply is needed to power the lock/strike. When using a wet relay power is already supplied through the relay.

The X1-8 Door Controller is powered by the DMP PS12-5 Power Supply and is set up from the factory to utilize this power supply to power the locks.

The XD Door Control Modules only wire dry because they do not have wet/dry jumpers.

Magnetic Lock - Normally Closed and Dry

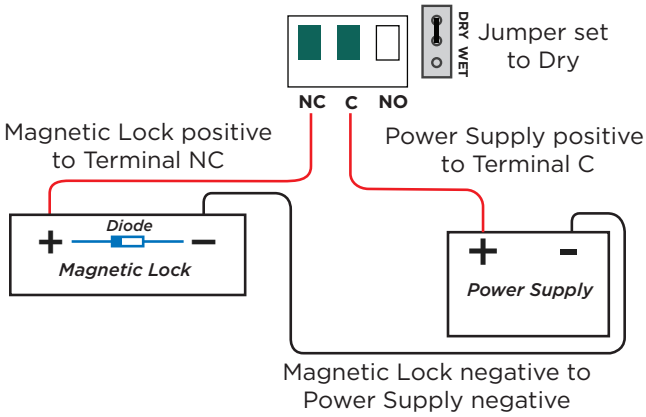

Door Strike - Normally Open and Dry

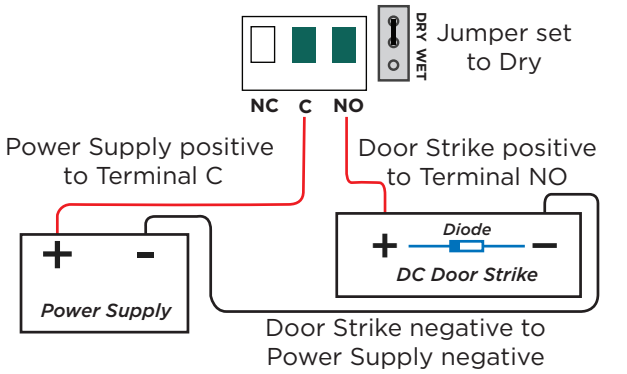

Magnetic Lock - Normally Closed and Wet

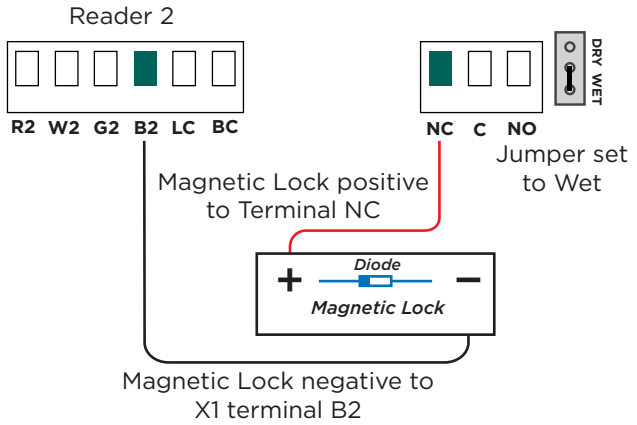

Door Strike - Normally Open and Wet

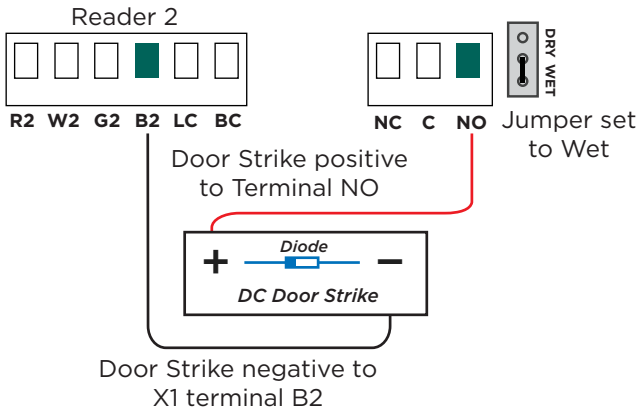

STEP 6: DETERMINE COMMUNICATION

The options in this section are in the DMP-recommended installation order. If an option is not part of your desired application, move to the next option.

Ethernet Connection

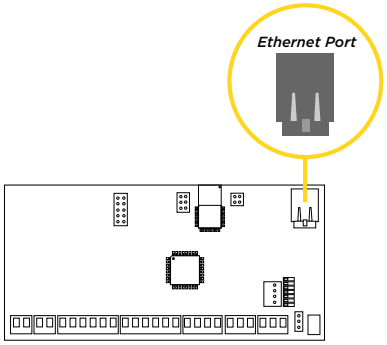

Connect an Ethernet cable from the LAN/WAN connection to the X1 PCB Ethernet port.

Two LEDs are located on the Ethernet port.

- The green LED indicates data is being sent over the network.
- The yellow LED indicates the speed of the transmission. A solid yellow LED indicates the network is connected at 100BASE-T. A flashing yellow LED indicates the network is connected at 10BASE-T.

Cellular Connection (Optional)

If the network cable or Wi-Fi are not connected, cell will be the primary communication. If the network cable or Wi-Fi are connected, the cell will be the backup communication.

1. Plug the included standoff into the door controller board.
2. Plug the cell module onto the standoff.
3. Plug the cell module into the cell header.
4. Screw on the cell module antenna cable to the antenna connector.
5. Run the cable around the installed power supply.
6. Attach the antenna with the nut on the inside of the enclosure and the washers on the inside and the top of the enclosure.

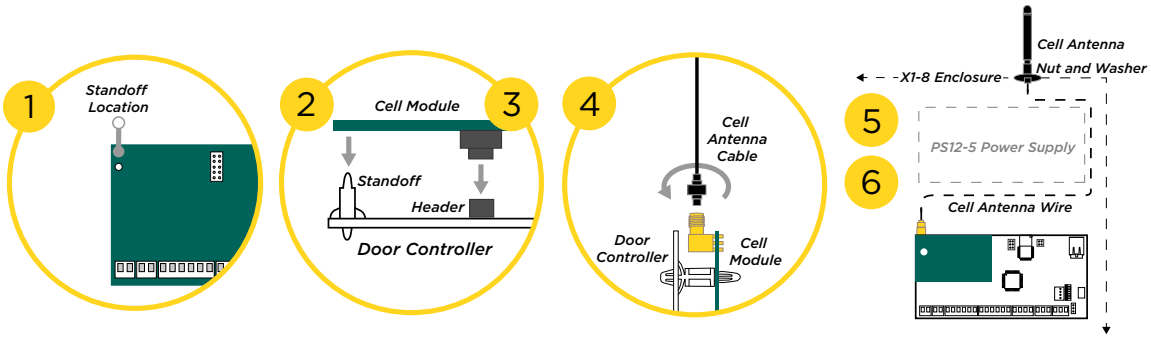

Once connected to an X1, the communicator will automatically register with the cellular carrier upon power up.

Note: The cellular communicator comes pre-activated, so it cannot be activated through Dealer Admin, Remote Link, or by calling Customer Service.

Wi-Fi Connection

A Wi-Fi connection or a static IP address must be established after power up. See Wi-Fi instructions later in this guide.

Note: You can connect over Ethernet or Wi-Fi, but not both at the same time.

Wi-Fi Antenna

The yellow Wi-Fi antenna connects to the right of the cell antenna on the enclosure.

1. If the cable has become detached from the door controller, simply wire it back onto the Wi-Fi module and run the cable around the module.
2. Run the Wi-Fi cable around the installed power supply. Use the included nut and washer to connect the antenna to the top of the enclosure.

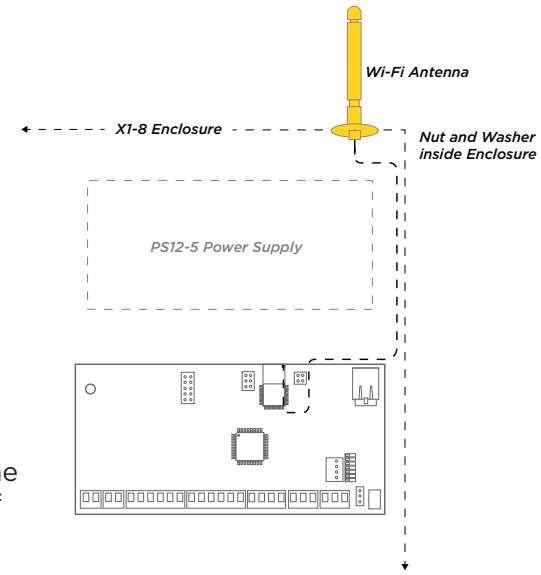

STEP 7: INSTALL OPTIONAL OUTPUT MODULE

X1 Output Module PCB Components

Refer to the diagram below throughout the installation.

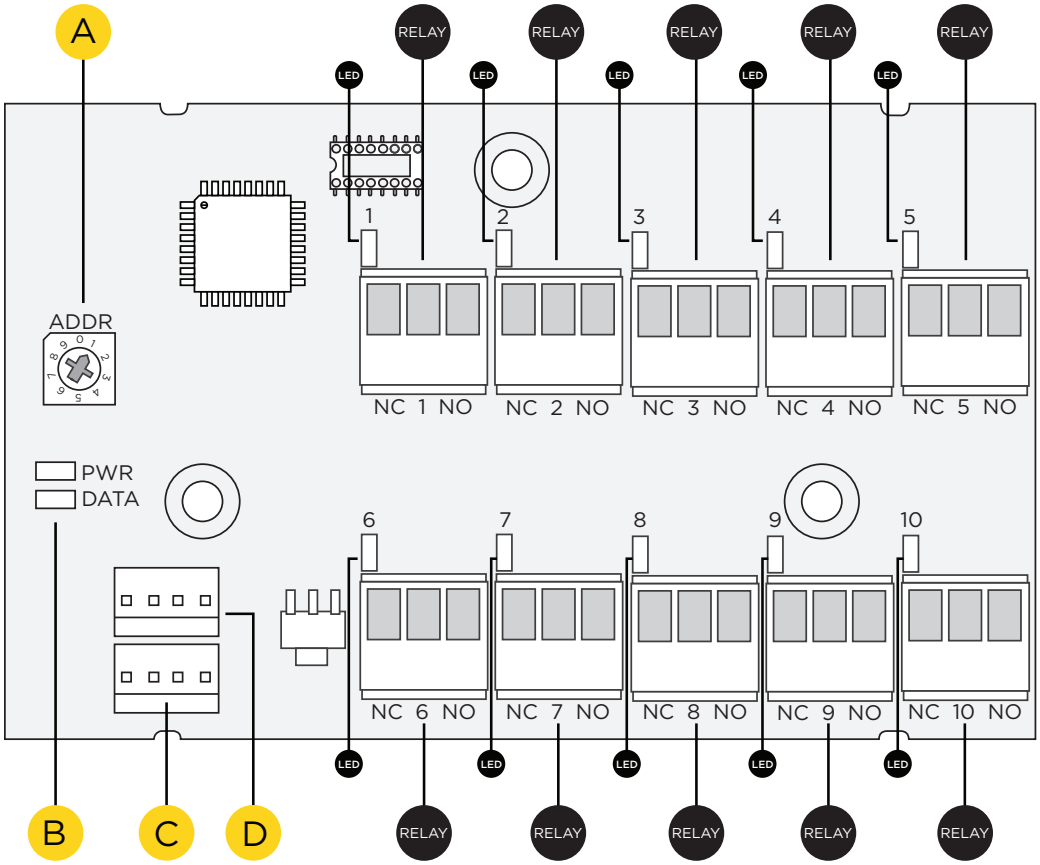

- A *Address Rotary*
- B *Power LEDs*
- C *Bottom 4-Wire Connector*
- D *Top 4-Wire Connector*
- RELAY *Output Relays*
- LED *Output Relay LEDs*

1 Mount the X1 Output Module

The metal enclosure for the X1 Output Expansion Module must be mounted to a wall, backboard, or other flat surface within 3 feet of the X1 or X1-8 Door Controller. It is not necessary to remove the PCB when installing the enclosure.

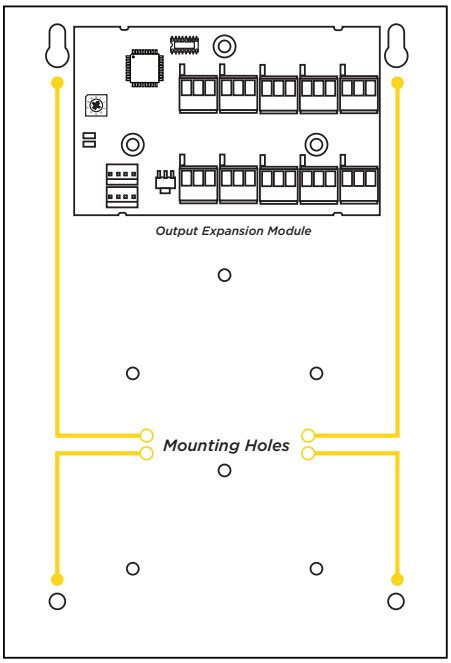

2 Address the X1 Output Module

The X1 Output Module (X1-OUT-EXP) has a 1 through 9 addressable rotary dial that is factory defaulted to 1. Additional output modules need to be addressed in sequence.

3 Wire the X1 Output Module

Use the included 4-position harness and enclosure knockouts to connect the top connector on the output module to the bottom connector on the last XD Door Controller Module.

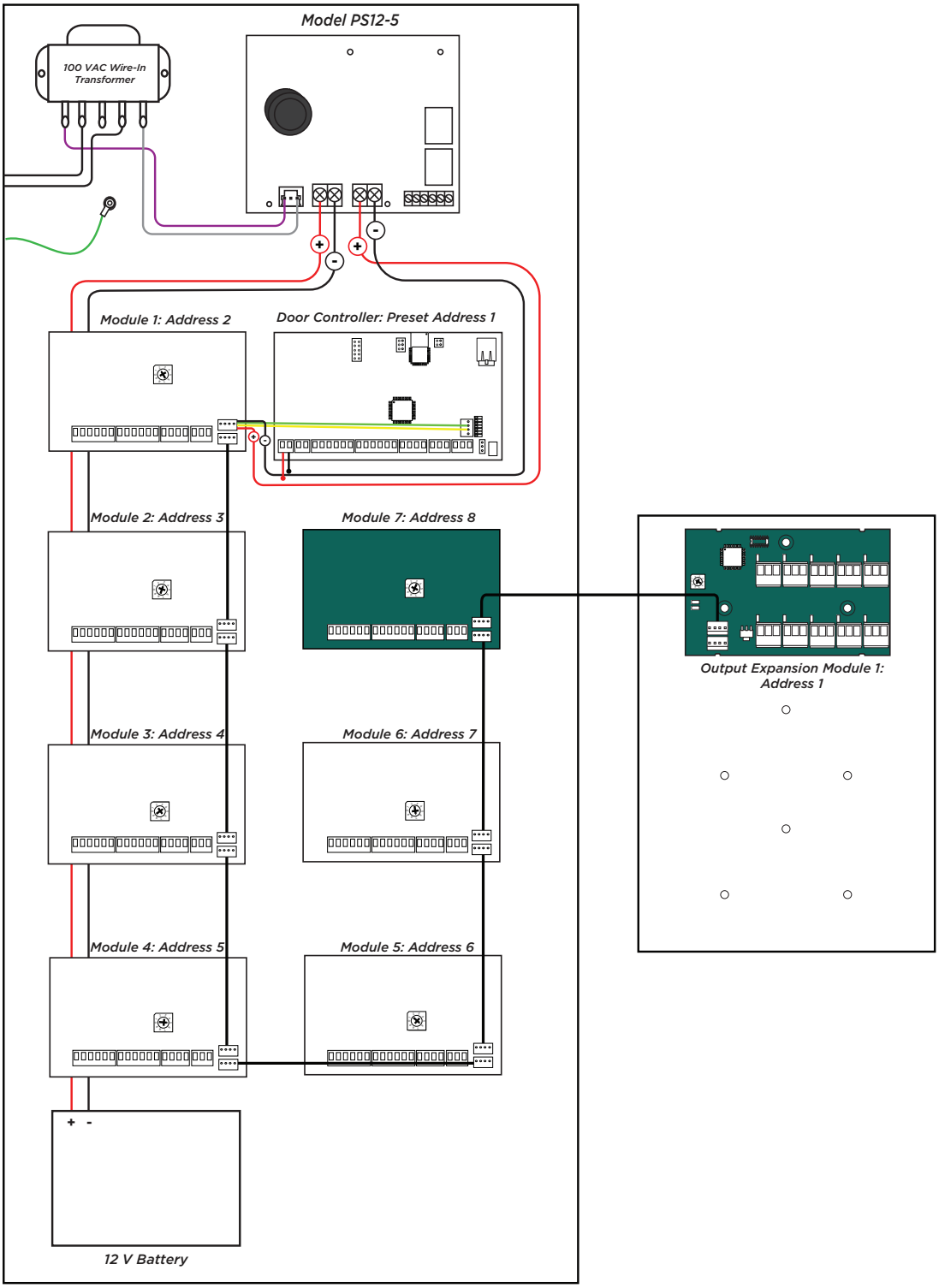

4 Optional Additional Output Modules

If not installing additional output modules, skip to Step 6 *Wire the Outputs*.

The metal enclosure for the X1 Output Expansion Module comes with mounting holes for two additional X1 Output Module PCBs. To mount the additional PCB, use the provided standoffs and screw the PCB onto the 3 mounting holes.

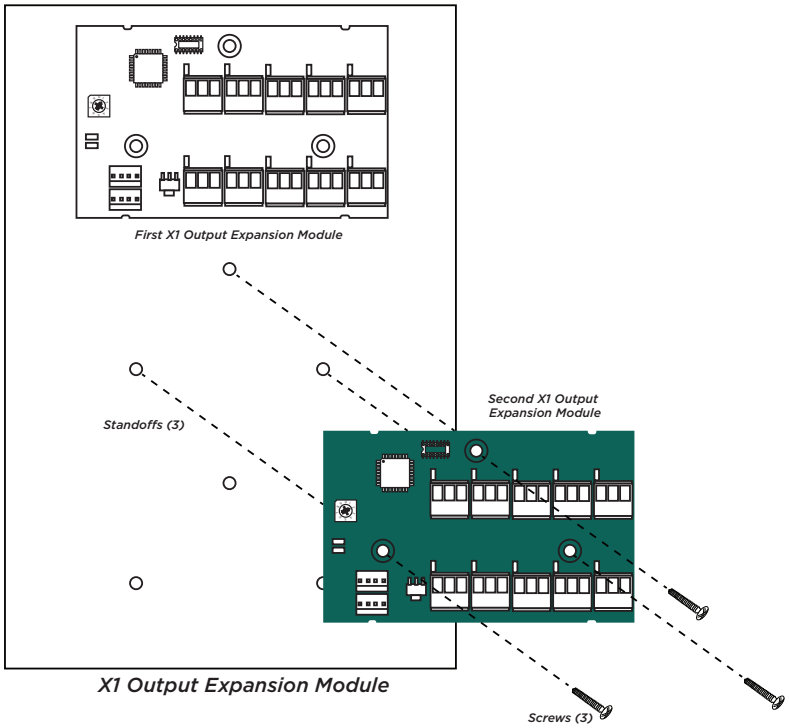

5 Wire the Additional Output Modules

If not installing additional output modules, skip to Step 6 *Wire the Outputs*.

Use the included 4-position harness to connect the top connector on the second output module to the connector on the first output module.

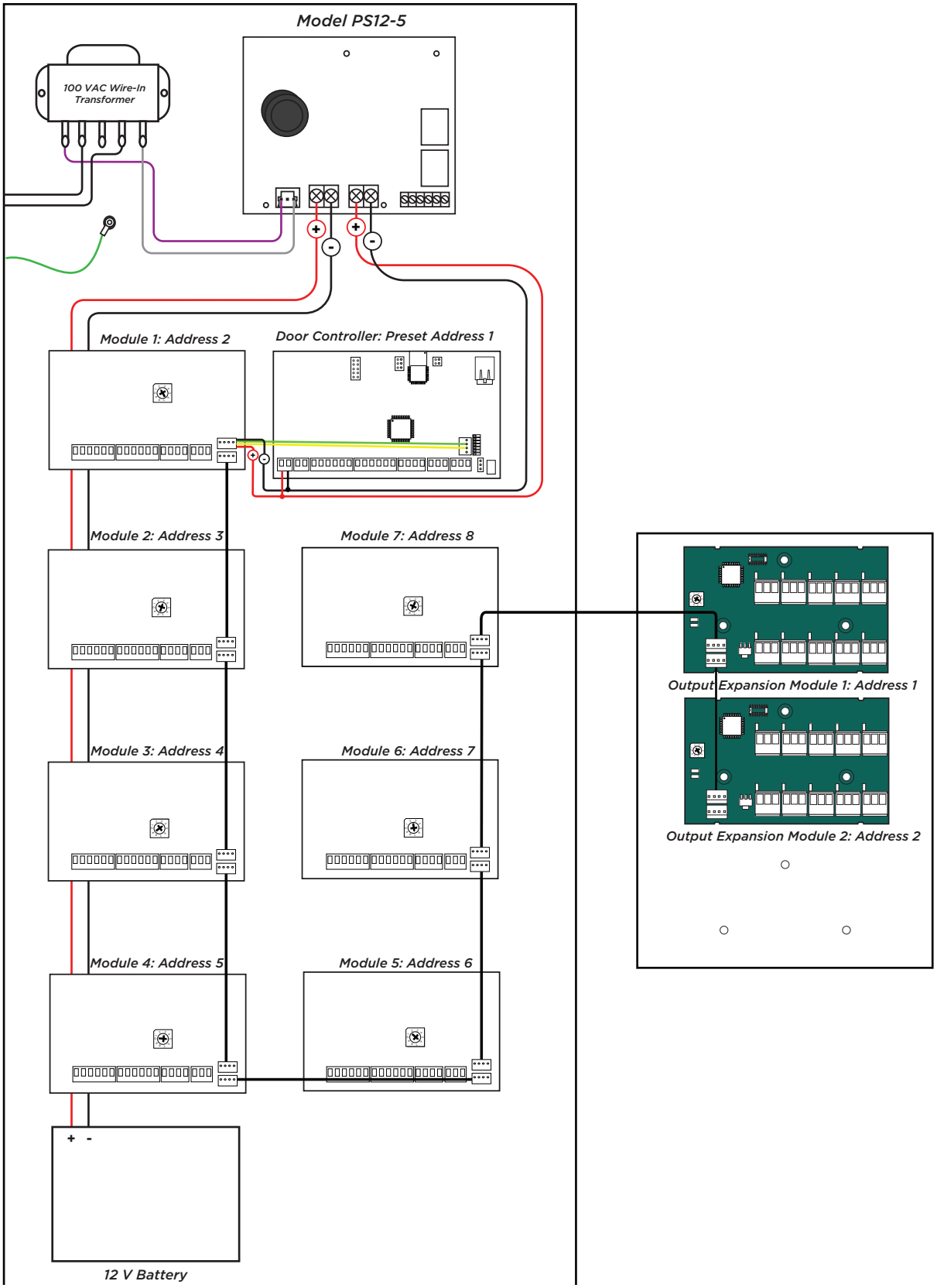

6 Wire the Outputs

To wire for output control, use the 10 terminals on the output module.

The X1 Series Output Module provides 10 Form C (SPDT) 1 Amp relays for controlling access to 10 outputs. The three relay terminals are labeled for normally open (NO) and normally closed (NC) operation. The center terminal is the common.

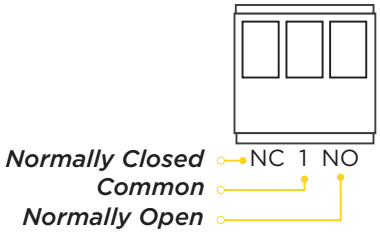

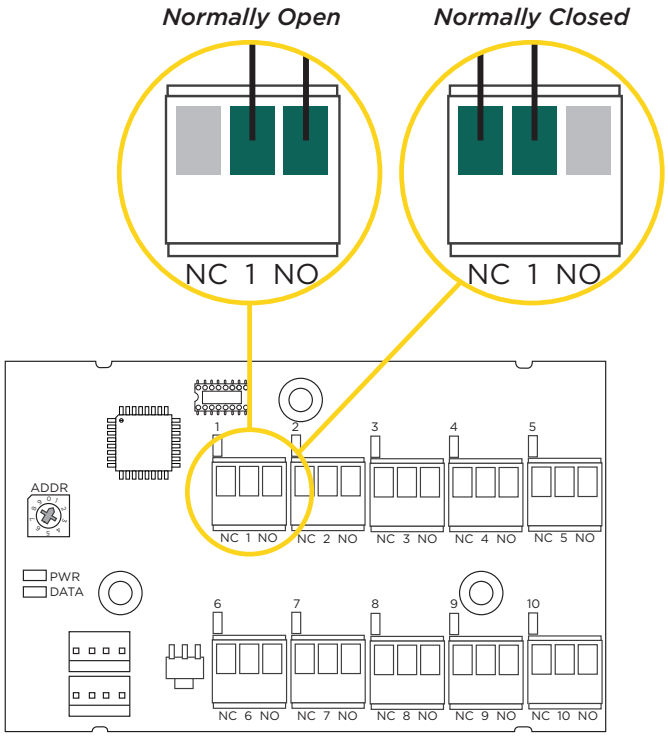

X1 Output Expansion Module

STEP 8: APPLY POWER

Warning: Refer to your local state regulations before connecting to building power. Wiring methods shall be in accordance with NEC, NFPA72, ANSI, and with all Authority Having Jurisdiction

Ground the Door Controller

Be sure to secure the green wire lead to an earth ground. Connect to a cold water pipe or ground rod when available. Connection to an electrical ground or conduit can also be used. Gas pipes or sprinkler pipes should not be used.

Wire AC Power

Connect an unswitched 120 V AC 60 Hz power source to the transformer. Knockouts are supplied for power input.

Wire the Battery

The battery leads for the X1-8 come pre-wired.

Connect the red battery lead to the battery positive terminal. Connect the black battery lead to the negative battery terminal. Observe polarity when connecting the battery. For additional power, use the 318 Battery Harness with additional batteries wired in parallel.

Wire the XD Door Control Modules

The XD Door Control Modules come pre-wired and addressed in the order shown here.

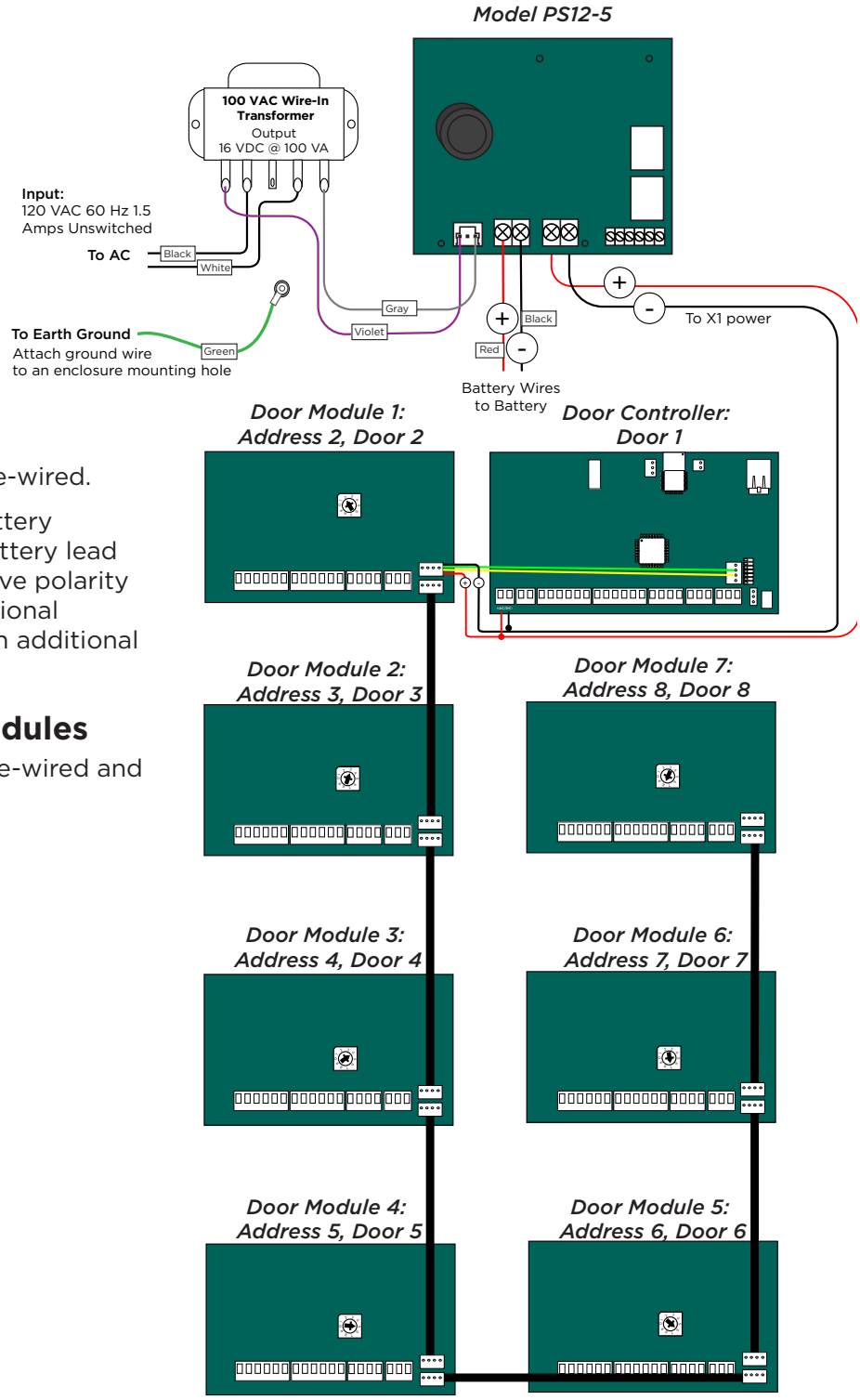

Check the Addresses of the XD Door Control Modules

The XD Door Control Module address is based on its location in the enclosure.

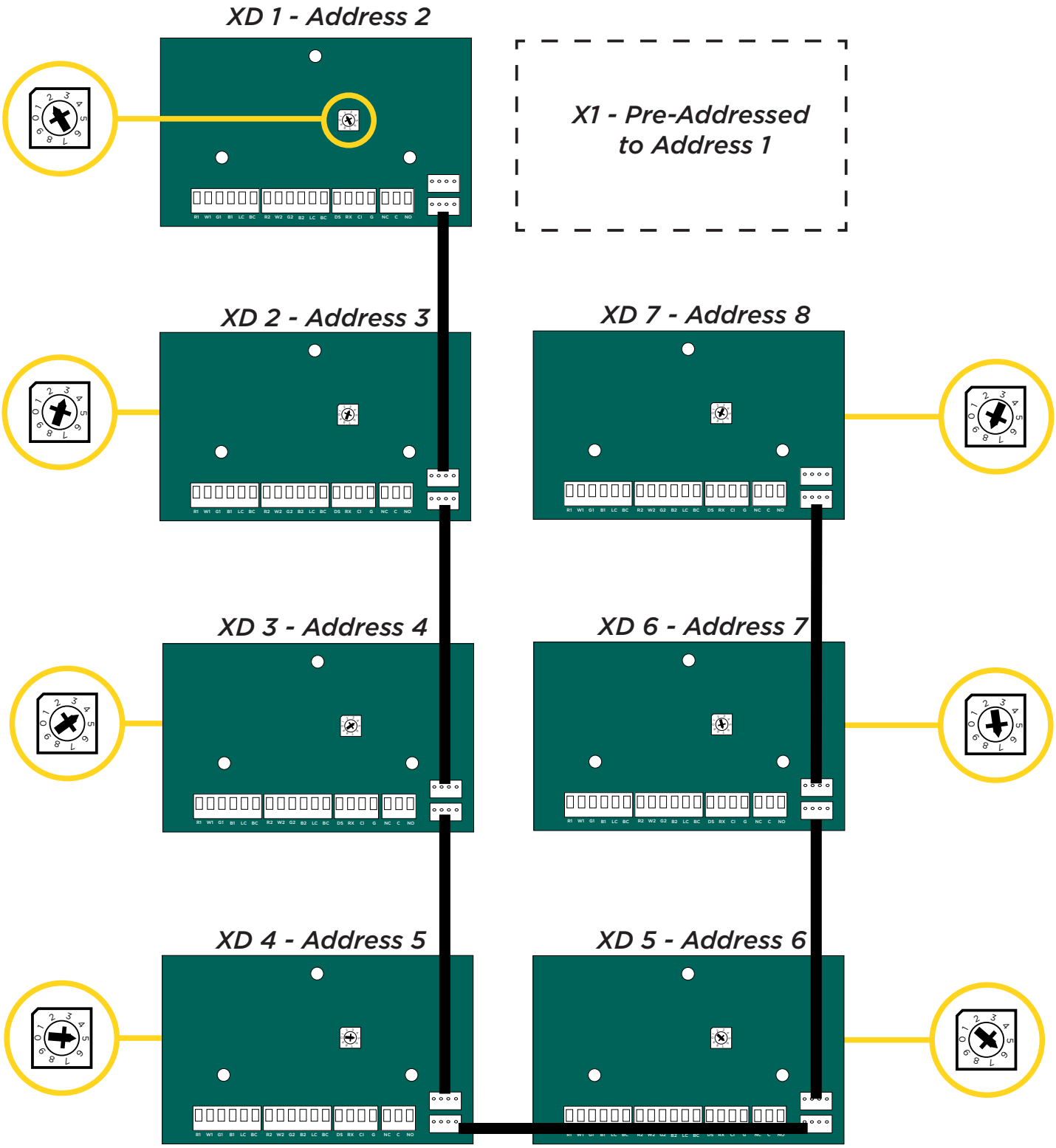

Door Controller Wiring Example

The diagram here shows the transformer and the battery wiring. It also shows a possible application with an electronic lock wired normally closed with wet contacts.

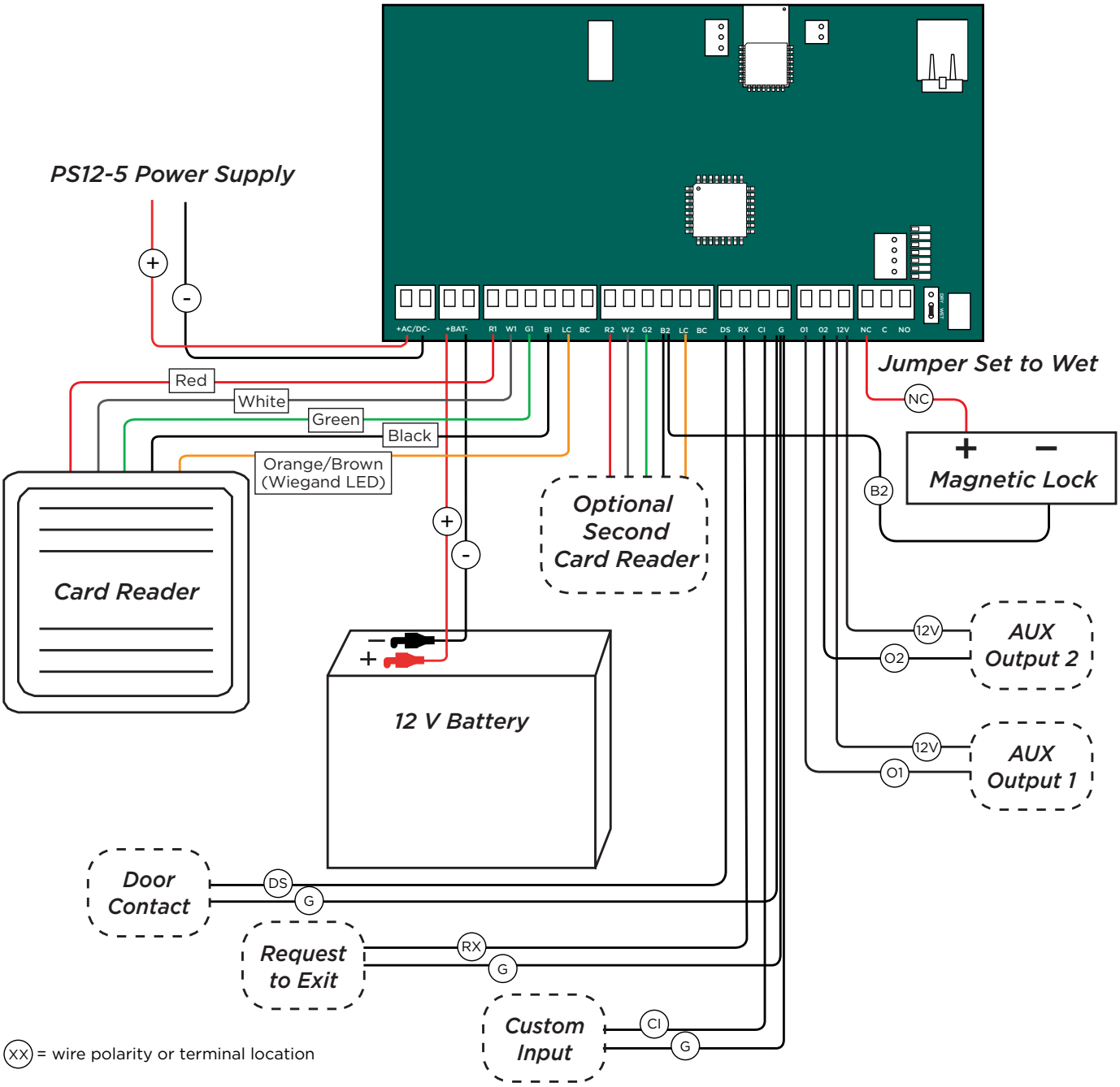

XD Door Control Module Wiring Example

A door control module wires similarly to a door controller, except the door control module locks must be wired in a dry state with power supplied by the Model PS12-5 Power Supply.

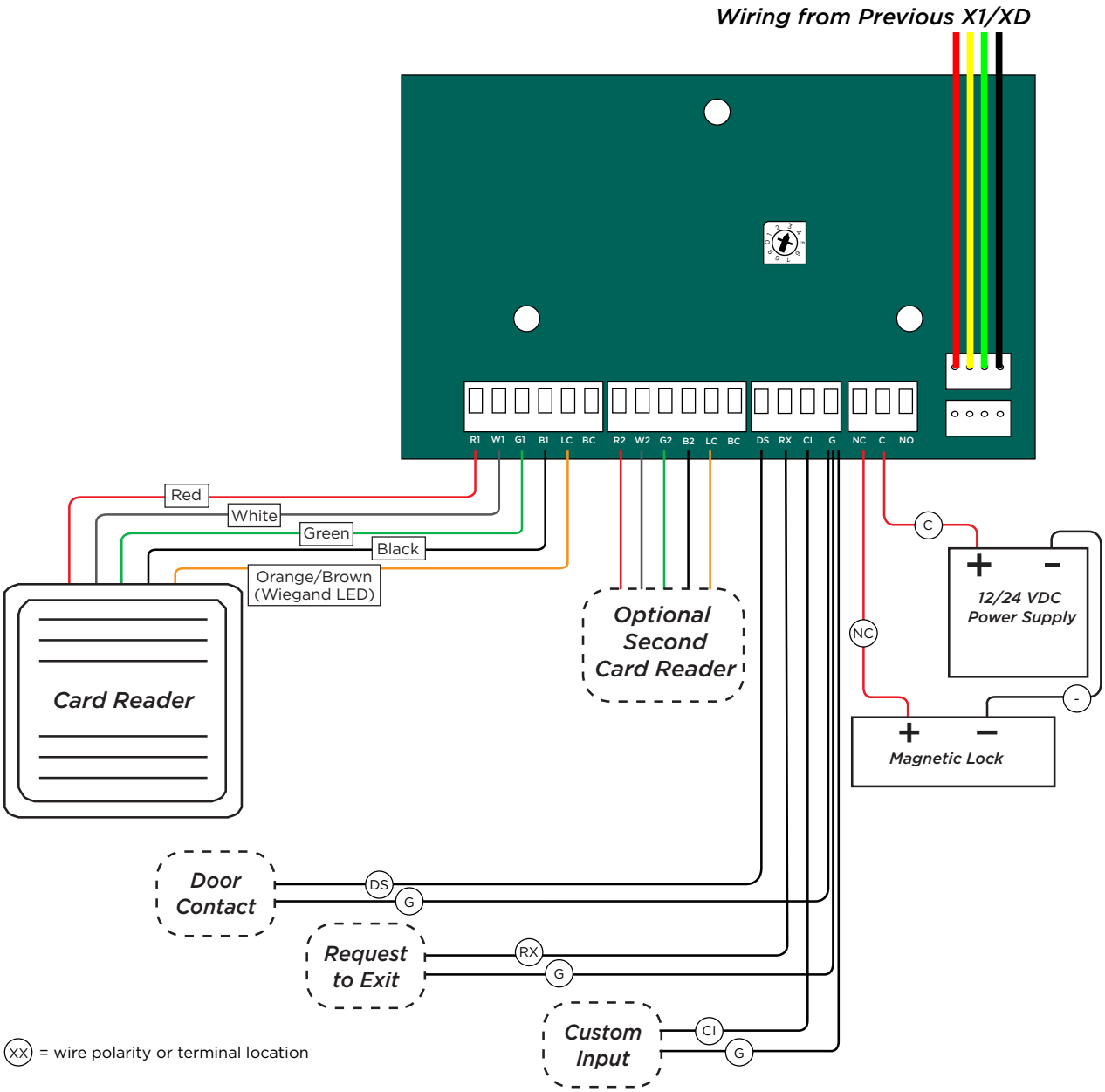

STEP 9: MANAGE CONNECTION SETTINGS

During the fifteen minutes after power up, the X1 broadcasts an SSID of **DMPX1** followed by the door controller's serial number.

Depending on the connection type, follow the steps in either the Wi-Fi, Network, or Cell sections below.

Configure Wi-Fi Settings

1. Connect to the X1's SSID using a cell phone, tablet, or laptop. If using a phone, use only Wi-Fi and disable mobile data. Some phones may try to use the mobile data connection.
2. Enter **192.168.1.1** into the URL field.
3. In the **Wi-Fi** options, enter the customer's Wi-Fi network information.
4. Select **Apply**, and the X1 will reset.

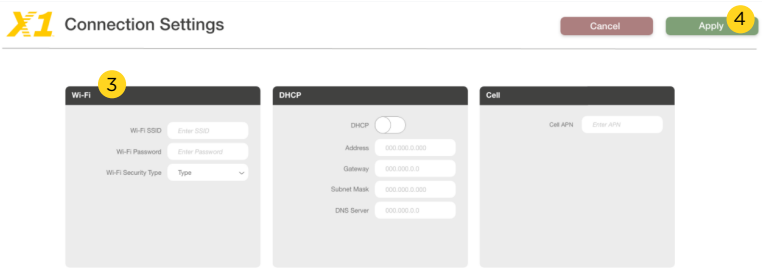

Once the X1 has reset, it will automatically connect to the customer's network with the updated settings.

Configure Network Settings

1. Connect to the X1's SSID using a cell phone, tablet, or laptop. If using a phone, use only Wi-Fi and disable mobile data. Some phones may try to use the mobile data connection.
2. Enter **192.168.1.1** into the URL field.
3. In the **DHCP** options, make edits to the desired fields.
   - DHCP: This option is turned on by default.
   - Static IP: Turn off DHCP and enter the information in the required fields.
4. Select **Apply**, and the X1 will reset.

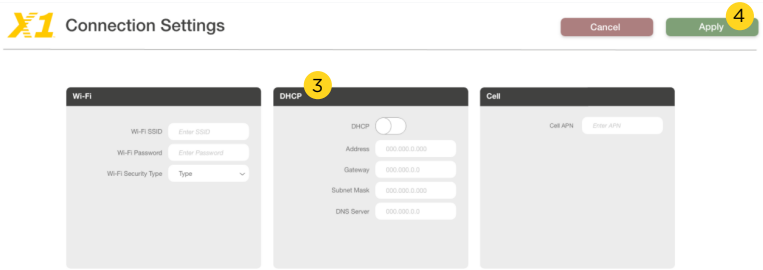

Once the X1 has reset, it will automatically connect to the customer's network with the updated settings.

Configure Cell Settings

On power up, if using cell, the X1 automatically connects and programming in Dealer Admin can begin.

Troubleshoot SSID Broadcast

If more than fifteen minutes have passed since power up or if the X1 does not broadcast an SSID:

5. Short the L terminals for 3 seconds and then place the jumper back on one pin of the L terminal. This will give an additional fifteen minutes of broadcasting.
6. Configure the desired connections settings.

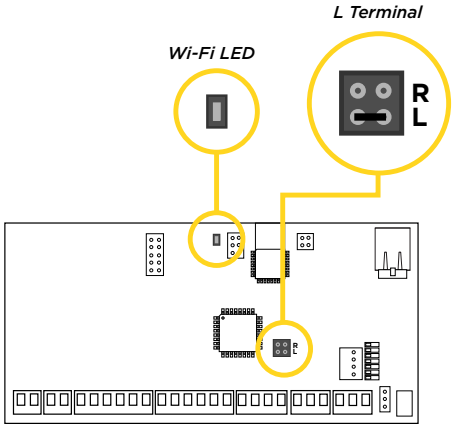

STEP 10: PROGRAM IN DEALER ADMIN

After you've installed the X1 Series Door Controller and configured basic communication settings, follow the steps in each of the following sections to program a door controller in Dealer Admin:

1. Sign In to Dealer Admin
2. Add a Customer
3. Add the X1-8 Door Controller to the Customer
4. Program the X1-8 Door Controller
5. Add Card Formats
6. Add an X1 Output Module (Optional)
7. Enable Video Services
8. Add an App User
9. Log in as Customer

1 Sign In to Dealer Admin

Go to the Dealer Admin login page. Enter your **Email** and **Password**, then press **Sign In**.

2 Add a Customer

1. At **Customers**, select + Add.
2. Enter the customer's name and email.
3. Enter the customer's contact information if desired.
4. Press **Save**.

3 Add the X1-8 Door Controller to the Customer

1. Go to **Customers**.
2. Select a customer to open the **Customer Summary**.
3. In **Systems**, select + Add.
4. Enter a name for the door controller.
5. In **System Type**, select **X1**.
6. Configure billing address and time options as needed.
7. Enter the door controller's serial number.
8. Press **Save**.

4 Program the X1-8 Door Controller

If door options don't open automatically, select the X1 that you want to configure.

1. Enter a descriptive name for the door.
2. In **Strike Time**, enter the number of seconds that you want the door to unlock when access is granted.
3. In **Strike Delay**, enter the number of minutes that you want to delay the door unlock when access is granted.
4. In **Reader Protocol**, choose a protocol for this door's readers: **Wiegand** or **OSDP**. For OSDP readers, configure buzzer and LED options.

   Note: OSDP readers must be either new or factory reset so they can bind properly with the door controller. A unique OSDP secure key is automatically programmed.

5. If you have wired any onboard outputs, name them in **Onboard Output 1 Name** and **Onboard Output 2 Name**.
6. Turn on additional options as needed.

Additional Door Options:

- **Buzzer** (OSDP) allows the reader to beep when a card is read.
- **LED** (OSDP) allows the reader LED to turn on and operate the same as a Wiegand reader LED, lighting green when the module relay activates. If disabled, the reader LED is turned off and does not operate in any condition.
- **Card** (Authorization) enables the use of cards for any of the doors.
- **Fire Zone** indicates this custom input triggers with a fire alarm.
- **Fire Exit** allows the door to unlock during a fire so people can exit the area.
- **Include in Lockdown** allows this door to be included when a lockdown is initiated.
- **Door Sensor** allows a door contact to monitor door sensor.
- In **Prop Time**, enter the number of seconds that you want to allow the door to remain open without triggering an alert.
- **Door Forced Message** sends a status message any time a door is forced open.
- **Request To Exit** (REX) allows a REX device to shunt the door sensor to prevent door force messages when people exit. REX is usually triggered by motion near the door or a button press.
- **Unlock On REX** appears when the **Request To Exit** toggle is switched on. The toggle defaults to switched on. To allow the door to unlock when a Request to Exit input is received, switch on the feature. This is typically for magnetic locks. To keep the door locked when a Request to Exit input is received, switch off the toggle. This is typically for door strikes.

7. For an alarm panel integration, turn on **Alarm Panel**. In the **Output to Alarm Panel** drop-down menu, select which onboard output will be used. Default is **None**.

   Note: The **Alarm Panel** option can only be used with network connected X1 Door Controllers.

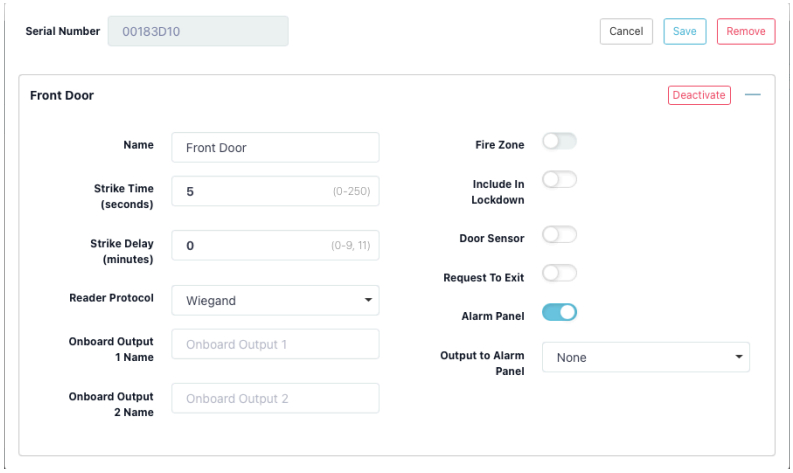

8. The selected output will be wired to an available zone on the connected alarm panel. The zone must be programmed as an **Arming** or **Keyswitch** zone type. Wire an available output from the connected alarm panel to the Custom input of the X1 controller. The output of the connected alarm panel should be programmed as an armed output.

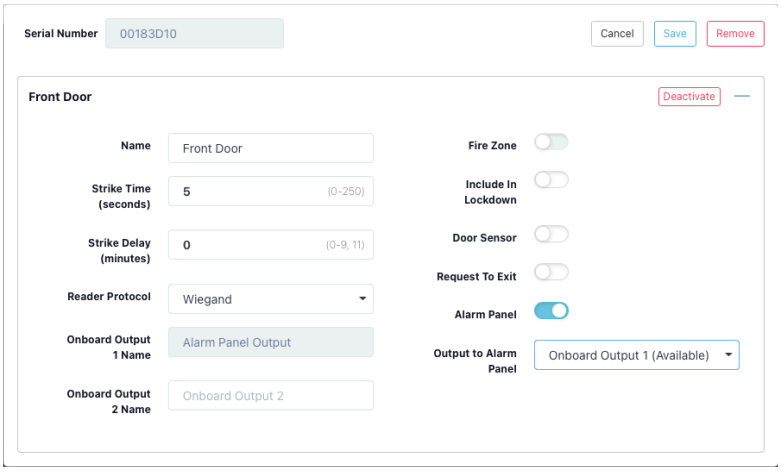

9. Press **Save**.

5 Connect the X1-8 Door Controller to an XR Series Panel (Optional)

X1 to XR communication allows for sites with an X1 Door Controller and an XR Series panel to communicate over the same network to arm and disarm areas, initiate a fire exit, and initiate a lockdown across the site.

1. Click **Edit**.
2. At **XR Communication**, click the toggle to enable the X1 site to be connected to the XR system.

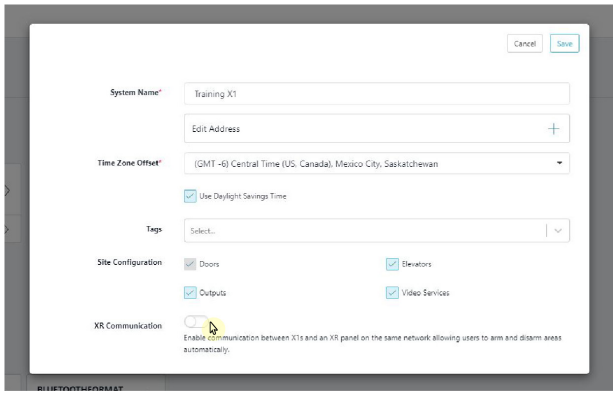

3. At **XR Serial Number**, enter the serial number of the XR panel you want the X1 site to communicate with.

4. (Optional) At **X1 Site Passphrase**, click **Copy Passphrase**. This passphrase is automatically generated and cannot be edited. If the XR panel is already online, then Dealer Admin will automatically program the passphrase in the XR panel.

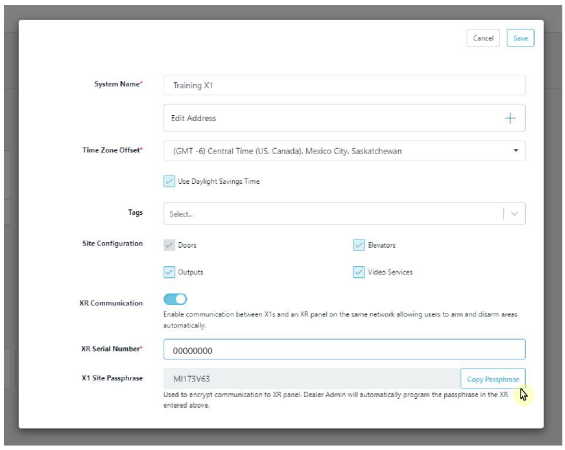

5. Click **Save**.

6 Add Card Formats

The first card format for any door is defaulted to DMP. Refer to *Card Format Options* below when programming card formats.

1. In **Card Formats**, select + Add.
2. Give the card format a name.
3. Select a card format and configure format settings.

Card Format Options.

- **DMP** (card format) use cards with DMP's format with a 26 – 45 bit data string.
- **Custom** (card format) use cards with a custom bit length and configuration.
- **Any** (card format) unlock the door with any valid card read.
- **Wiegand Length** is the total number of bits to be received in Wiegand code including parity bits.
- **Site Code Position** is the site code start position in the data string.
- **Site Code Length** is the site code length.
- **User Code Position** defines the user code start bit position.
- **User Code Length** defines the credential user code length.
- **User Code Digits** defines the user code length.
- **Require Site Code** restricts the door so it only unlocks when the card's site code matches one programmed in Site Code.

4. Press **Save**.

7 Add an X1 Output Module (Optional)

If your application does not include an X1 Output Module, skip to *Enable Video Services*.

5. Go to **System Information**.
6. Under **Outputs**, select + Add.
7. Select the X1 that the output module is connected to.
8. For **Output Name**, use a descriptive name for the output expansion module's location,
9. For each **Relay**, name each output that you intend to use. Unnamed outputs will not be programmed.
10. Press **Save**.

8 Enable Video Services

1. In **Video Services**, select + Add.
2. Select the types of cameras or NVRs that you want to enable on the door controller.
3. Select any third-party applications that you want to enable on the door controller. This allows users to sign in to their services from Virtual Keypad.
4. Press **Save**.
5. Back on the **System Information** page, select the number of cameras and storage space you require or choose the number of doorbells that you want to add to the door controller.

9 Add an App User

Adding an app user to an X1 Door Controller automatically adds them as a user in Virtual Keypad.

1. Go to **Customers**.
2. Select a customer to open the **Customer Summary**.
3. In the **App Users** section, select + Add.
4. For a user that doesn't have a Virtual Keypad account, select **New**. For a user that already has an account, select **Existing**.
5. For a new user, enter their email address. For an existing user, start typing to search for their email and select it from the list.
6. Set the user's authority level to either **Administrator** to manage multiple door controllers or **Standard** to manage a single door controller.
7. For a new user, enter their first and last name.
8. If you want to email the user video clips, select **Email Video Clips**.
9. Select systems and permissions for the user.
10. Press **Save**.

Note: If you receive a message that states the email is already in use, the user already has a Virtual Keypad account. Select **Existing** below the user's email address.

10 Log In as a Customer

1. Select **Login as Customer** to log in to Virtual Keypad and view the door controller like a customer would. This adds you to the door controller as a temporary app user with admin privileges without the capability to view video. Your temporary app user expires and is automatically removed from the door controller after 1 hour.
2. Go to **Groups**.
3. Select + Add.
4. Select the name placeholder and enter a descriptive name for the group.
5. In **Doors**, add the doors that you want group members to have authority to access.
6. In **Floors**, add the floors that you want group members to have authority to access.
7. In **Access Schedules**, choose when group members can access the assigned doors.
8. Select permissions for group members.
9. Select **Save**.
10. Go to **Users**.
11. Select the user you want to attach the group to.
12. Select the group you want the user to have.
13. Select **Save**.

STEP 11: TEST THE DOOR CONTROLLER

Make sure that the Reader LEDs are on and the door controller's Power LED is on. If connected to Wi-Fi, the Wi-Fi LED is on solid. If connected to network, the Network Port light is blinking. For cell and all communication methods, check that door controller is communicating with Dealer Admin and Virtual Keypad after Dealer Admin programming is completed.

If using an output module, the each LED is on when the relay is on and off when the relay is off.

ADDITIONAL INFORMATION

LEDs

LED	Meaning
PWR/BOOT	On when board is powered and operating
READER 1	Turns on for one second to indicate receipt of a valid input from the In Reader determined by card format programming
READER 2	Turns on for one second to indicate receipt of a valid input from the Out Reader determined by card format programming
RELAY	On when door relay is active
DATA	On when the XD Door Control Modules are connected and communicating properly
FIRE	On when the door controller is in a fire alarm
LOCKDOWN	On when the door controller is in a lockdown state

Cell Module Removal

1. Unscrew the antenna cable from the antenna connector.
2. Unplug the cell module from the cell header.
3. Pinch the tab of the standoff to release the cell module from the door controller.

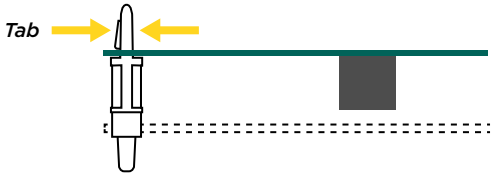

Door Controller Initialization

Warning: This process clears all Dealer Admin programming and defaults the door controller back to factory settings.

1. Unplug the XD Door Control Module(s) from the 4-wire connector.
2. Place a jumper over the L header of the door controller.
3. Within 15 seconds, place a jumper on the center two pins of the 4-wire connector (short the green and yellow together). Reader 1, Reader 2, Fire, and Lockdown operation LEDs turn on.
4. Within 15 seconds, remove both jumpers. The above LEDs will turn off. The Power LED will turn on steady to indicate the factory default is complete.
5. Plug the XD Door Control Module(s) back into the 4-wire connector.

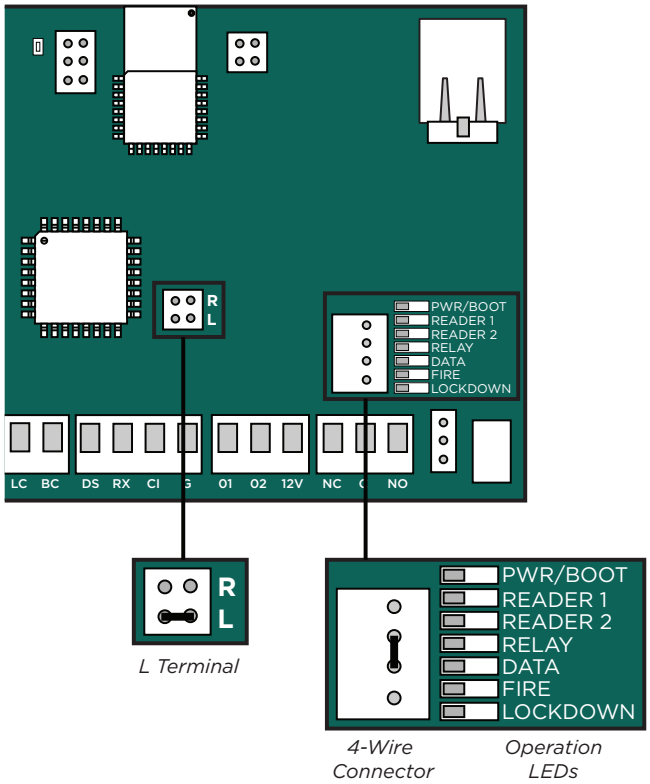

FCC INFORMATION

This device complies with Part 15 of the FCC Rules. Operation is subject to the following two conditions:

1. This device may not cause harmful interference, and
2. this device must accept any interference received, including interference that may cause undesired operation.

The antenna used for this transmitter must be installed to provide a separation distance of at least 20 cm (7.874 in.) from all persons. It must not be located or operated in conjunction with any other antenna or transmitter.

Changes or modifications made by the user and not expressly approved by the party responsible for compliance could void the user's authority to operate the equipment.

Note: This equipment has been tested and found to comply with the limits for a Class B digital device, pursuant to part 15 of the FCC Rules. These limits are designed to provide reasonable protection against harmful interference in a residential installation. This equipment generates, uses and can radiate radio frequency energy and, if not installed and used in accordance with the instructions, may cause harmful interference to radio communications. However, there is no guarantee that interference will not occur in a particular installation. If this equipment does cause harmful interference to radio or television reception, which can be determined by turning the equipment off and on, the user is encouraged to try to correct the interference by one or more of the following measures:

1. Reorient or relocate the receiving antenna.
2. Increase the separation between the equipment and receiver.
3. Connect the equipment into an outlet on a circuit different from that to which the receiver is connected.
4. Consult the dealer or an experienced radio/TV technician for help.

INDUSTRY CANADA INFORMATION

This device complies with Industry Canada Licence-exempt RSS standards. Operation is subject to the following two conditions:

1. This device may not cause interference, and
2. this device must accept any interference, including interference that may cause undesired operation of the device.

This system has been evaluated for RF Exposure per RSS-102 and is in compliance with the limits specified by Health Canada Safety Code 6. The system must be installed at a minimum separation distance from the antenna to a general bystander of 7.87 inches (20 cm) to maintain compliance with the General Population limits.

Le présent appareil est conforme aux CNR d'Industrie Canada applicables aux appareils radio exempts de licence. L'exploitation est autorisée aux deux conditions suivantes:

1. *l'appareil ne doit pas produire de brouillage, et*
2. *l'utilisateur de l'appareil doit accepter tout brouillage radioélectrique subi, même si le brouillage est susceptible d'en compromettre le fonctionnement.*

L'exposition aux radiofréquences de ce système a été évaluée selon la norme RSS-102 et est jugée conforme aux limites établies par le Code de sécurité 6 de Santé Canada. Le système doit être installé à une distance minimale de 7.87 pouces (20 cm) séparant l'antenne d'une personne présente en conformité avec les limites permises d'exposition du grand public.

X1 SERIES MULTI-DOOR ACCESS CONTROLLER

Specifications

Power	
Input	120 V AC
Current Draw	166 mA at 12 V DC
X1	96 mA
XD	10 mA
Battery	2 x 9 Ah (recommended) 2 x 12 Ah (max)
Power Output Max*	
PS12-5	5 A
X1	1.5 A
XD	750 mA
O1, O2 Max	50 mA
Communication Options	
Ethernet	10/100
Wi-Fi	2.4 GHz b/g/n
Cellular	263LTE-A-X1/381-2, 263LTE-V-X1/381-2
Mechanical	
Enclosure Dimensions	14.5" W x 32" H x 4" D (lid adds 0.5" on each side) 36.8 cm W x 81.3 cm H x 10.2 cm D (lid adds 1.3 cm on each side)
Weight	34 lbs
Environmental	
Temperature	0 ° C to 49 ° C 32 ° F to 120 ° F
Humidity	5% to 85% RHNC

Compatibility

263LTE-A-X1/381-2 (X1-8)	Cell Module for AT&T
263LTE-V-X1/381-2 (X1-8)	Cell Module for Verizon
X1-8PCB	X1-8 PCB Replacement
XDPCB	XD PCB Replacement
X1-OUT-EXP	X1 Output Expansion Module

Certifications

ANSI/UL 294	Access Control System Units
Level I	Destructive Attack and Line Security
Level IV	Endurance and Standby Power

Manufacturer's Limited Warranty
3 year warranty against defects in materials and workmanship. Visit DMP.com for full details.

*The PS12-5 is factory-wired to supply power to all included modules. If door hardware exceeds 5 A an additional power supply will be required.

Designed, engineered, and manufactured in Springfield, Missouri

INTRUSION • FIRE • ACCESS • NETWORKS
2500 North Partnership Boulevard
Springfield, Missouri 65803-8877
800.641.4282 | dmp.com