INSTALLATION AND PROGRAMMING GUIDE

PowerCom Series Universal Alarm Communicator

Digital Monitoring Products, Inc.

© 2026

TABLE OF CONTENTS

About the Communicator 1

System Components 1

Terminals 1

Programming (PROG) Connection 2

Tamper 2

Reset Button 2

Performing a Firmware Update 2

Backlit Logo 3

Mount the Enclosure 3

Wire the Communicator 4

Connect the Antenna 4

Applications 5

CID Dialer Connection 5

Communication Failure 5

Activate the Cellular Module 6

Dealer Admin Activation 6

Programming 7

Before You Begin 7

Getting Started 7

Programming Menu 7

Reset Timeout 7

Special Keys 8

Letters and Special Characters 9

Current Programming 9

Initialization 10

Clear All Codes 10

Clear All Schedules 10

Clear Events 10

Clear Zone Programming 10

Clear Communication 10

Set to Factory Defaults 10

Communication 11

Account Number 11

Transmission Delay 11

Communication Type 11

Backup Cell 11

Test Time 11

Net/Cell Test Days 11

Check-In Minutes 11

Fail Time Minutes 11

Send Communication Trouble 11

Backup Check-In Minutes 11

Backup Fail Time Minutes 12

Receiver 1 Programming 12

Receiver 2 Programming 12

Network Options 13

DHCP Mode Enabled 13

Local IP Address 13

Gateway Address 13

Subnet Mask 13

DNS Server 13

Programming Port 13

Remote Options 14

Remote Key 14

Remote Disarm 14

App Key 14

System Reports 14

Opening/Closing Reports 14

Zone Restoral Reports 14

Send Stored Messages 14

Send System Information 14

System Options 15

Entry Delay 1 15

Exit Delay 15

Cross Zone Time 15

Power Fail Delay 15

Swinger Bypass Trips 15

Reset Swinger Bypass 15

Time Changes 15

Hours from GMT 16

Host Format 16

CID Format 16

Output Options 17

Cutoff Outputs 17

Output Cutoff Time 17

Communication Failure Output 17

Armed Output 17

Remote Arming Output 17

Area Information.....18
Area Number.....18
Area Name.....18
Automatic Arming.....18
Automatic Disarming.....18
Zone Information.....19
Zone Number.....19
Zone Name.....19
Zone Location.....19
Zone Type.....19
Next Zone.....20
Alarm Action.....20
Disarmed Open.....20
Message To Transmit.....20
Output Number.....20
Output Action.....21
Swinger Bypass.....21
Cross Zone.....21
Receiver Routing.....21
Zone Number.....21
Stop.....22
Set Lockout Code.....22
Stop.....22
Set Lockout Code.....22
Appendix.....23
Diagnostics Function.....23
Walk Test.....24
Trip Counter for Walk Test (STD).....24
Test End Warning.....24
Failed Zones Display.....24
Using the 984 Command Function.....24
NET.....24
CELL.....24
Using the Walk Test.....24
Cross Zoning.....25
Additional Information.....25
Replace the Backup Battery.....25
FCC NOTICE.....26
Industry Canada.....26
NFPA 72.....26

ABOUT THE COMMUNICATOR

For commercial fire or residential fire installation, PowerComF modules provide primary network communication, secondary cellular communication, two sets of tip and ring terminals, as well as a 24 hour backup battery, red enclosure and a Model 685-R (Red) Backbox.

For commercial burglary installation, PowerCom-2 modules are housed in a white enclosure and provide cellular communication using DualSIM, which supports activating Verizon, AT&T, or both cellular networks.

PowerCom Series also includes four input zones and two open-collector outputs for connection to control panel outputs and zones. Connect to the bell output of an existing control panel using zone 4 on the communicator. The communicator operates in a variety of applications: CID Dialer Connection, Zones 1-4 Input Connections, or Zone 4 Bell Connection. See Applications.

Features

- Can be powered from 12 VDC or 24 VDC
- 24 hour backup battery
- Zone 1-4 terminals with 12 V and 24 V power input
- EASYconnect™
- 2 sets of tip and ring terminals
- Programming header for connecting to a programming keypad
- LED to indicate armed state

What is Included

- PCB with enclosure
- Model 685-R Backbox
- Hardware pack
- External antenna
- Plug-in Power Supply, 372-500-W
- 24 hour backup battery

SYSTEM COMPONENTS

Terminals

Power Connection Terminals

The communicator may be powered from the included Model 372-500-W plug-in DC power supply or 24 VDC auxiliary output of the control panel.

PowerCom Series Standby Power

During a power outage, the communicator draws power from 24 hour a backup battery included in the unit within the enclosure.

Zones 1-4

Terminals Z1 to Z3, G (ground), Z4+ and Z4- provide four zones to connect to individual relay outputs on the control panel. Zone 4 (Z4+ and Z4-) can be connected to the control panel bell output. See Zone 4 Bell Connection.

Open-Collector Outputs

Terminals O1 and O2 can be programmed to indicate the activity of the zones or conditions occurring on the system. Open-Collector outputs do not provide a voltage but instead switch-to-ground the voltage from another source. Maximum voltage is 30 VDC at 50 mA. The outputs can respond to any of the conditions listed below:

- Activation by zone condition: Steady, Pulse, Momentary, or Follow
- Communication
- Armed area annunciation
- Remote Arming Output

Dialer Connection

Directly connect the Telco phone line (tip and ring) from the control panel to the terminal R (Ring) and one into terminal T (Tip). For more information, refer to “CID Dialer Connection”.

Programming (PROG) Connection

A 4-pin programming header is provided to connect a keypad when using a DMP Model 330 programming cable. This provides a quick and easy connection for programming the communicator. For 24 VDC applications using the communicator, connect the keypad using a Model 330-24 4-wire programming harness with an in-line resistor. After programming is complete, remove the keypad.

Caution: If connecting to a 24 VDC control panel, do not connect a keypad using a Model 330 harness.

Tamper

The tamper is pressed when the cover of the communicator is secured onto the enclosure. When the cover is removed, the communicator sends a tamper trouble message to the central station.

Reset Button

The reset button is located on the upper right side of the circuit board and is used to reset the communicator. After resetting the communicator, begin programming within 30 minutes. If you wait longer than 30 minutes, reset the communicator again.

Note: After the panel is reset, cell suppression is disabled for 30 minutes.

Performing a Firmware Update

Firmware can be updated with the programming header. Firmware updates are available for download, free of charge, on the DMP Dealer Direct website at Product Software Downloads.

Dealer Admin

1. Log in to dealer.securecomwireless.com.
2. Select the PowerCom system connected to the account.
3. The **System Information** page opens. Go to **Remote Update**.
4. If there are any available updates, select **Update System**.

Model 401 USB Flash Module

Caution: Do not connect a Model 401 to the communicator if using 24 V power.

When loading the firmware RU file onto a USB drive, place the file in the root directory of the USB drive. The update cannot be inside a folder. Format the USB drive as FAT32.

Place only one firmware file in the root directory. If more than one RU file exists on the USB drive, the communicator will choose the RU file with the most recent date modified.

Caution: Using the wrong RU file for the update will cause the communicator to stop working until the correct RU file is used to flash the firmware.

1. Connect the USB flash drive to the Model 401.
2. Press and hold the reset button on the communicator. You will continue to hold reset until step 6.
3. Connect the assembly to the communicator's programming header.
4. Press and release the button on the Model 401.
5. With your finger still on RESET, press and hold the load button. Continue to hold LOAD until step 8.
6. Release the reset button.
7. Press and release the button on the Model 401.
8. When the green LED on the Model 401 starts a slow flash, release the load button. The slow flash will last 5 minutes, then the green LED will become steady, indicating the firmware version is updated.

   Note: If the LED blinks rapidly, the update was unsuccessful. Press and release RESET. Begin again at step 1.

9. Press and hold RESET. Remove the Model 401, then release RESET to resume normal operation. In the event the Model 401 USB Flash Module is inadvertently removed from the communicator before the update finishes, repeat steps 1-9.

Backlit Logo

The backlit logo indicates the power and armed status of the communicator. Depending on the operation, the LED displays in red or green. The LED indicates the armed state and status of the system primary power.

ARMED STATE	POWER STATE	GREEN LED	RED LED
Disarmed	AC/Battery Good	On	Off
	AC Bad	Off	Off
	AC Good/Battery Bad	Flashing .5 seconds on/off	Off
Armed	AC/Battery Good	Off	On
	AC Bad	Off	Flashing .5 seconds on/off
	AC Good/Battery Bad	Alternate between Red/Green every .5 seconds	

Mount the Enclosure

For Commercial Fire applications using the PowerCom and the included red plastic Model 685-R backbox, mount the backbox to the wall with the 1" #6 screws included with the fire communicator.

Place the battery in the backbox and route the wires through the cutouts. Connect the battery lead connector to the PowerCom header.

Note: The PowerCom is shipped with double sided tape that can be used to install the battery.

Mount the fire communicator to the backbox with the 1/2" #6 screws. See Figure 1.

Note: To find the cellular provider on the PCB, see callout **K** below.

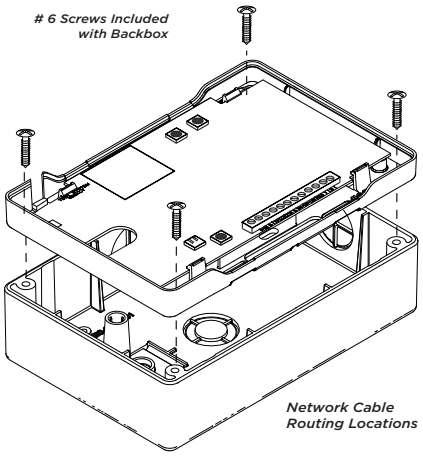

Figure 1: Model 685-R Backbox Installation

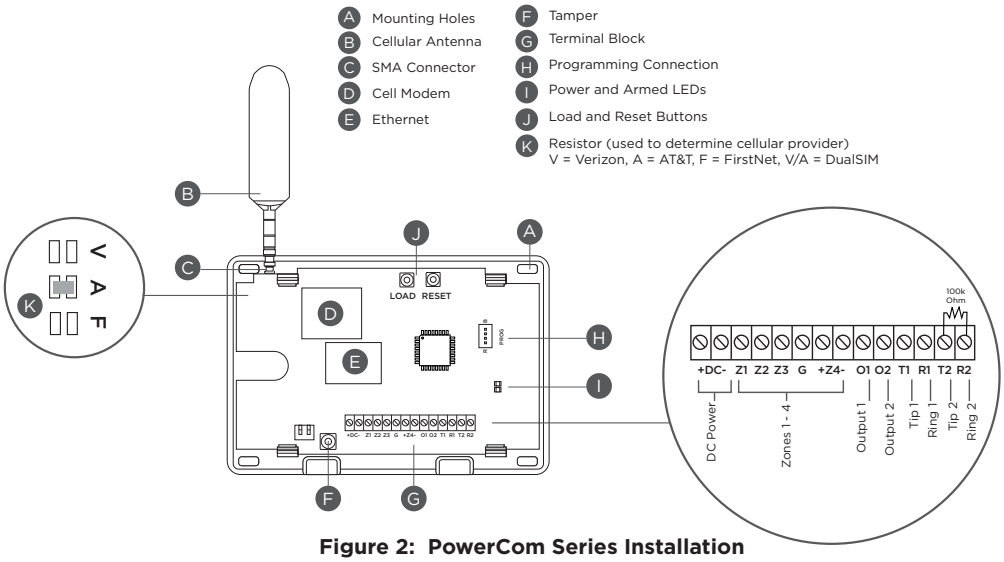

Figure 2: PowerCom Series Installation

Wire the Communicator

When connecting component wires, route all wires so they will not interfere with the tamper switch. See Figure 3 for wire routing options.

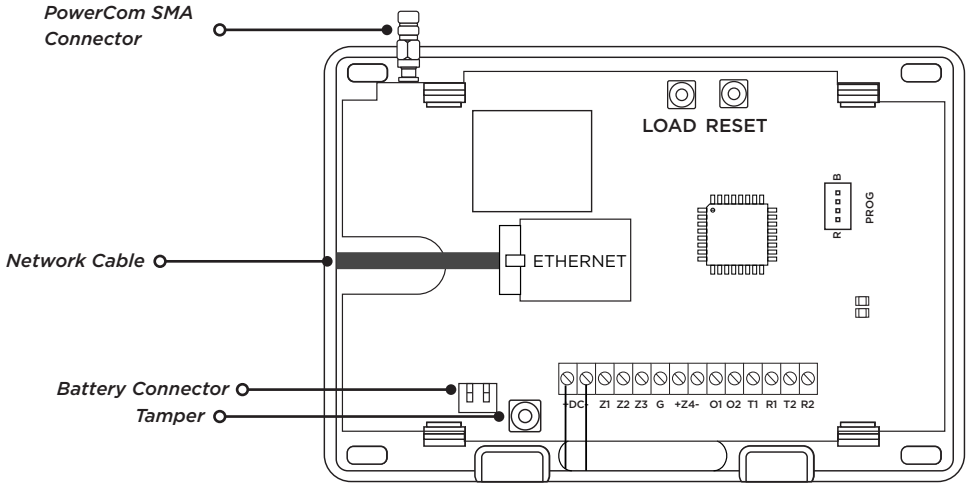

Figure 3: PowerCom PCB

Connect the Antenna

Place the antenna onto the SMA connector. Refer back to Figure 3. Twist the antenna until it is securely tightened.

Replace the housing cover on the mounted base. Be sure to not damage any PCB components when removing or replacing the housing cover.

Connect DC Power

Caution: Mount the PowerCom near a wall outlet for the Model 372-500-W plug-in DC power supply. In addition to powering the PowerCom, the plug-in DC power supply also charges the back-up battery. The 372-500-W must be located within 100 feet of the PowerCom using 22 AWG wire.

1. Using 22 AWG wire, connect the PowerCom DC terminal (+) to the positive terminal on the power supply.
2. Connect the PowerCom DC terminal (-) to the negative terminal on the power supply.
3. Plug the power supply in a 120 VAC 60 Hz dedicated outlet not controlled by a switch.

Connect AC and Battery Trouble Relays to the PowerCom

Connect AC TRBL relay outputs from NC (normally closed) and C (common) to an available zone on the PowerCom. Add a 1k reisistor in sequence and program as a Supervisory zone.

Connect BATT TRBL relay outputs from NC (normally closed) and C (common) to an available zone on the PowerCom. Add a 1k resistor in sequence and program as a Supervisory zone.

Wiring Specifications

Use 18 AWG or larger for all power connections. Ensure there is a minimum 0.25” space to keep power limited wiring separate from non-power limited wiring (120 VAC/60 Hz input, battery wires).

APPLICATIONS

CID Dialer Connection

Directly connect one or both tip and ring terminals from the control panel to the communicator. Install a 100K Ohm resistor if voltage across T2 R2 does not drop immediately when a trouble occurs. See Figure 4.

Note: Do not connect telephone company wires to the communicator. Remove any connected telephone company wires from the control panel.

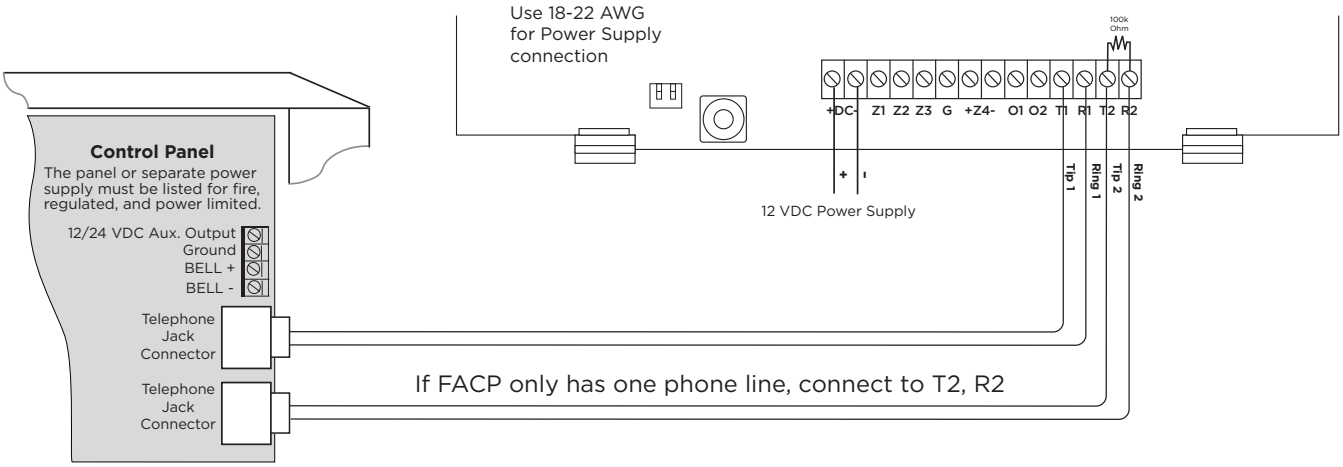

Figure 4: Wiring Diagram for Tip and Ring Connection

This connection captures Contact ID messages from any fire panel that are based on the SIA communication standard DC-05-1999.09-DCS. Messages are then formatted into a Serial 3 message and sent to an SCS-1R Receiver or SCS-VR Receiver.

Messages can also be sent as a DMP string with raw CID message appended. See Figure 5. This feature requires SCS-VR Version 1.4.6 and higher or SCS-150 Version 107 and higher.

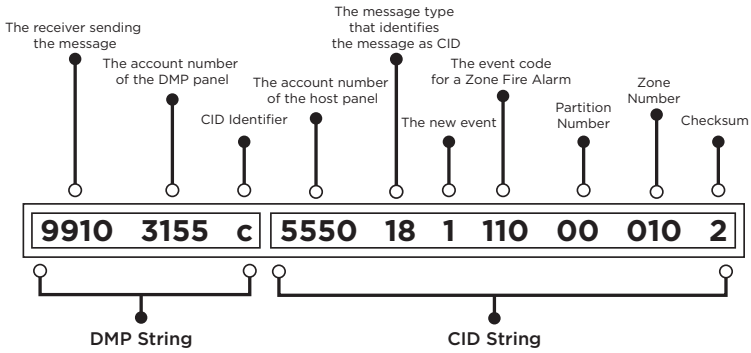

Figure 5: CID Format Option

Communication Failure

The phone line voltage on the second tip and ring will drop when the PowerCom is in a communication failure state. This triggers the host panel to annunciate a communication failure. When communication is restored, voltage is restored on the second tip and ring terminal and the host panel sees a restoral on the phone line.

ACTIVATE THE CELLULAR MODULE

For more information about using Dealer Admin, refer to DMP's Help Files page.

Dealer Admin Activation

1. Navigate to the Dealer Admin site (dealer.securecomwireless.com).
2. Go to **Customers** and select the customer name.
3. In **Systems**, select the Add icon.
4. Enter the system name.
5. In **System Type**, select **DualCom**.
6. In **Connection Type**, select **Cellular** or **EASYconnect + Cell Backup**.
7. In **SIM Number**, enter the SIM number and select **Get Status**.

Note: To activate DualSIM, select the checkbox next to **Use DualSIM**. Enter the two requested SIM numbers and select **Get Status.**

8. Select **Activate**.
9. In **Account Number**, enter the system's receiver number followed by the account number.
10. Select a **Rate Plan** for the communicator.
11. Enter the panel **Serial Number**.
12. To confirm proper communication, select **Test Connection**.
13. A dialog box displays to ask if you want to perform the initial connection to the panel. Select **Yes**.
14. Configure additional options as needed, then press **Save** at the top of the page.

PROGRAMMING

Before You Begin

Read this guide before you begin programming. This guide allows you to quickly learn the programming options and operational capabilities of the PowerCom Series. The communicator contains all of its programming information in an on-board processor and does not require an external programmer.

Default Master Code

Universal Communicators ship with a unique four-digit default master code. This master code is generated with an algorithm that ensures it cannot be duplicated. The code can be modified or deleted in panel programming. To revert the default code to 99, use the Clear All Codes option found in the Initialization menu. Panels ship with the master code on the serial number label next to the serial number.

Getting Started

Initializing the Communicator

When programming a communicator for the first time or rewriting the entire program of an existing communicator, use the initialization programming option. See Initialization. Initializing clears the communicator's memory and sets the highest user number to user code 99.

Accessing the Programmer

To access the programmer function of the communicator:

1. Connect the keypad to the programming header.
2. Press and release the reset button.
3. Enter **6653** (PROG). The keypad displays **PROGRAMMER**.

Programming Menu

The following is a list of programming menu options available in the programming menu. Press **CMD** to advance through the programming menu options. To select a menu option, press any select area when the desired menu option displays on the keypad. Use this list to navigate to your desired programming menu option in this guide.

- Initialization
- Communication
- Network Options
- Remote Options
- System Reports
- System Options
- Output Options
- Area Information
- Zone Information
- Stop
- Set Lockout Code

Reset Timeout

You must enter the programmer menu within 30 minutes of resetting the communicator to avoid reset timeout. After 30 minutes, if you attempt to program by entering the **6653** (PROG) code, the keypad displays **RESET PANEL**. You must reset the communicator and enter the program code within the next 30 minutes.

If you are already in the programmer menu and do not press any keys on the keypad for 30 minutes, the communicator exits programming. All data entered up to that point is saved in the communicator memory.

To exit the programmer menu, use the stop option. The stop option is the second-to-last option in programming and disarms all areas. The programming session is terminated and the keypad returns to status list or main screen.

Special Keys

The following keys and areas are common to all DMP LCD and graphic touchscreen keypads.

CMD

Command

Press **CMD** to advance through the programmer menu and through each step of a programming section. As you advance through the programmer menu, the keypad display any current programming already stored in the communicator memory. If no change is required for an option, press **CMD** to advance to the next step.

CMD is also used to enter information into the communicator's memory such as an IP address or a zone name. Press **CMD** after entering information.

←

Back Arrow

Use the back arrow to back up one step in a programming menu or to erase a typing error while entering information.

Select Areas

The top row of keys on LCD Keypads are called select areas. The select areas on graphic touchscreen keypads are along the top of the keypad. When you need to press a select area, the keypad displays the options.

When there are more than four response options available, press **CMD** to display the next set of options. Press the back arrow to return to the previous options.

LCD Keypads

The first select area is on the far left. The second select area is second from the left. The third select area is second from the right. The fourth select area is on the far right and is for special characters. See Figure 6.

Graphic Touchscreen Keypads

When instructed to press the first select area, touch select area 1; the second select area, touch select area 2; third select area, touch select area 3; and the fourth select area, touch select area 4. See Figure 7.

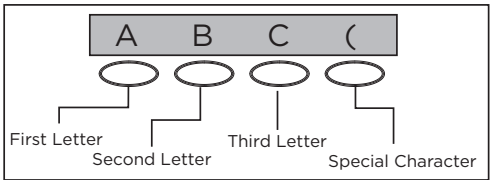

Figure 6: LCD Keypad Select Keys

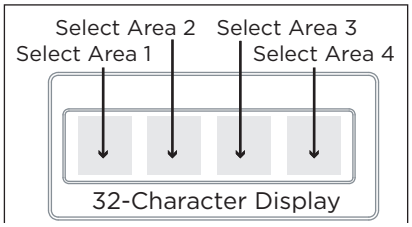

Figure 7: Graphic Touchscreen Keypad Select Areas

Letters and Special Characters

Use the number pad directions below to enter letters and special characters on a number pad or use the standard keyboard directions to enter letters and special characters on a standard keyboard.

Number Pad

1. Choose a character from Table 1.
2. Identify the number the character correlates with and press that number on the number pad.
3. Identify the select area for that character and press that select area on the keypad. To access the lowercase letter, press that select area again.
4. When the desired character displays on the keypad, return to step 1 to enter another character or press **CMD** if finished.

NUMBER	SELECT KEY 1	SELECT KEY 2	SELECT KEY 3	SELECT KEY 4
1	A	B	C	(
2	D	E	F	)
3	G	H	I	!
4	J	K	L	?
5	M	N	O	/
6	P	Q	R	&
7	S	T	U	@
8	V	W	X	,
9	Y	Z	space	_
0	-	.	*	#

Table 1: Entering Letters and Special Characters in the Number Pad

Standard Keyboard

- Press ABC to access uppercase letters.
- Press abc to access lowercase letters.
- Press !@# to access symbols and special characters.
- Press 123 to access the number pad.

Note: Not all keypad prompts accept letters and/or symbols. For example, pressing **P** on the **ENTER CODE** prompt could display a 6 on the keypad.

Current Programming

Each programming option that displays shows the information already programmed in the communicator memory. To change the already programmed information, simply replace the information. To change a programming option that requires a **YES** or **NO** response, press the select area for the desired response.

INITIALIZATION

INITIALIZATION

This option allows you to set the communicator's programmed memory back to the factory defaults in preparation for system programming.

After selecting **YES** to clear a section of memory, the communicator asks if you are sure you want to clear the memory. This is a safeguard against accidently erasing part of your programming. No memory is cleared from the programming until you answer **YES** to the confirmation prompt.

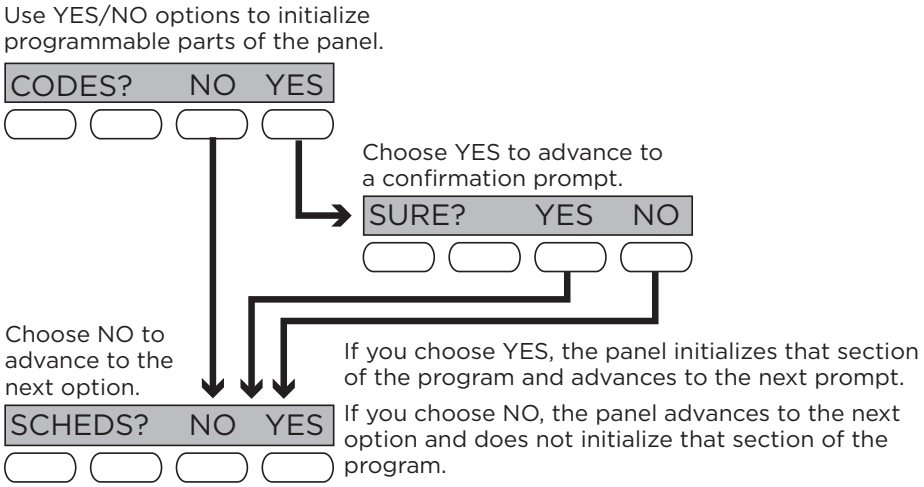

Figure 8: Alternating Yes and No Options

CODES? **NO** YES
SURE? YES NO

CLEAR ALL CODES

Choose **NO** to leave existing codes intact.

Choose **YES** to clear the user code memory and assign user code number 99 to user 20.

SCHEDS? **NO** YES
SURE? YES NO

CLEAR ALL SCHEDULES

Choose **NO** to leaves existing schedules intact.

Choose **YES** to clears all schedules from the programming.

EVENTS? **NO** YES
SURE? YES NO

CLEAR EVENTS

Choose **NO** to leave existing event memory intact.

Choose **YES** to clear all event memory in the display events buffer.

ZONES? **NO** YES
SURE? YES NO

CLEAR ZONE PROGRAMMING

Choose **NO** to leave existing zone information intact.

Choose **YES** to set all zones in the system to *__UNUSED__*.

COMMS? **NO** YES
SURE? YES NO

CLEAR COMMUNICATION

Choose **NO** to leave existing communication programming intact.

Choose **YES** to clear communication to factory defaults.

DEFAULTS? **NO** YES
SURE? YES NO

SET TO FACTORY DEFAULTS

Choose **NO** to leave the remainder of the existing communicator programming intact.

Choose **YES** to set the communicator programming back to factory default selections.

Note: Choosing **YES** does not clear the event memory, zone, user code information, or schedules.

COMMUNICATION

COMMUNICATION

This option allows you to configure the communication settings for the communicator.

ACCOUNT NUMBER

ACCOUNT NO:

Enter the account number sent to the receiver. The range is 1-65535. For account numbers of four digits or less, do not enter leading zeros.

TRANSMISSION DELAY

XMIT DELAY: **0**

Enter the number of seconds the communicator waits before sending burglary alarm reports to the receiver. The range is 15-45 seconds. The default is **0**. Enter **0** to disable this function.

COMMUNICATION TYPE

COMM TYPE:
NET CELL

The communicator uses **NET** or **CELL** to connect with SCS-1R or SCS-VR receivers and default to **NET**.

BACKUP CELL

BACKUP CELL?:
NO YES

If **NET** is selected as the primary communication type, **BACKUP CELL** will display and give you the option to enable or disable cellular backup.

TEST TIME

TEST TIME
00:00 AM

Enter the time of day the communicator should send the test report to the SCS-1R or SCS-VR receivers. Use entries between 12:00 to 11:59 and then choose **AM** or **PM**. To enable daily tests from the host panel, leave the time blank and enable test reports for receiver 1 and/or for receiver 2. See Test Report.

NET/CELL TEST DAYS

NET TST DAYS: **1**
CELL TEST DAYS: **1**

If you entered a test time, you can enter how often the panel test report is sent to the receiver. The range is 1 to 60 and the default is **1**. Enter **0** to disable the test report.

CHECK-IN MINUTES

CHECKIN: **0**

Check-in reports are a method of supervising the panel for communication with the receiver. Enter the number of minutes between check-in reports. The range is 3-240 minutes. The default is **0**. Enter **0** to disable check-in minutes.

Note: Additional cell charges may apply if this option is used.

FAIL TIME MINUTES

FAIL TIME: **0**

Fail time allows the SCS-1R or SCS-VR receivers to miss a defined number of check-ins before logging that the panel is missing. For example, if cell check-in is 20 minutes and fail time is 30 minutes, the receiver only indicates a Panel Not Responding after 30 minutes. The fail time must be equal to or greater than the cell check-in minutes. If cell check-in is 20 minutes, the fail time must be 20 minutes or more. The range is 3-240 minutes. The default is **0**.

SEND COMMUNICATION TROUBLE

BACKUP
CHECKIN: **0**

Enable communication fail notification by selecting YES at COMM TRBL. Select NO to disable. Default is **YES**.

When COMM TRBLE is YES and the communicator detects a failure of communication, the communicator sends an S72 (Comm Trouble) message through a backup communication method with notification of the failure. If both primary and secondary mehtods of communication fail, then two S72 messages will be sent via the third communication method, if programmed.

When communication is restored, the communicator sends an S73 (Comm Restored) message through the primary communication.

If the primary or secondary communication type is CELL, S72 and S73 messages include the cell signal strength as a -dBm value.

BACKUP CHECK-IN MINUTES

BACKUP
CHECKIN: **0**

Set the number of minutes between check-in reports for BACKUP CELL if it was enabled. The range is 3-240 minutes. The default is **0**. Enter **0** to disable check-in minutes.

Note: Additional cell charges may apply if this option is used.

BACKUP
FAIL TIME: **0**

BACKUP FAIL TIME MINUTES

Set the number of minutes the receiver should wait to indicate that a panel is missing using **BACKUP CELL** if it was enabled. If cell check-in is 20 minutes, the fail time must be 20 minutes or more. The range is 3-240 minutes. The default is **0**.

RECEIVER 1 PROG

RECEIVER 1 PROGRAMMING

This option allows you to set the options for the first receiver the communicator attempts to contact when sending reports from the host panel and/or communicator. The communicator supports communication up to two receivers.

ALARM NO **YES**

ALARM REPORTS

Choose **YES** to enable Abort, Alarm, Alarm Restoral, Alarm Bell Silenced, Ambush, Exit Error, and System Recently Armed reports to be sent to this receiver. The default is **YES**.

Choose **NO** to disable sending these reports to the receiver.

SPV/TRBL NO **YES**

SUPERVISORY/TROUBLE REPORTS

Choose **YES** to enable Supervisory, Trouble, Trouble Restoral, Force Armed, and Fault reports to be sent to this receiver. The default is **YES**.

Choose **NO** to disable sending these reports to the receiver.

O/C USER NO **YES**

OPENING/CLOSING AND USER REPORTS

Choose **YES** to enable Opening/Closing, Schedule and Code Changes, and Bypass reports by user to be sent to this receiver. The default is **YES**.

Choose **NO** to disable sending these reports to the receiver.

TEST RPT NO **YES**

TEST REPORT

Choose **NO** to disable sending these reports to the receiver.

FIRST IP ADDR
000.000.000.000

FIRST IP ADDRESS

Enter the first (primary) IP address where the communicator sends messages. Enter all 12 digits and leave out the periods. For example, enter IP address 192.168.0.250 as 192168000250. The periods display automatically.

FIRST IP PORT
2001

FIRST IP PORT

Enter the first IP port number to be used with the first IP address. The IP port identifies the port used to communicate messages with the communicator. The default IP port setting is **2001**.

SECOND IP ADDR
000.000.000.000

SECOND IP ADDRESS

Enter the second IP address where the communicator sends messages. Enter all 12 digits and leave out the periods. The periods display automatically.

SECOND IP PORT
2001

SECOND IP PORT

Enter the second IP port number to be used with the second IP address. The IP port identifies the port used to communicate messages to and from the communicator. The default IP Port setting is **2001**.

RECEIVER 2 PROG

RECEIVER 2 PROGRAMMING

Set the options for the second receiver that the communicator attempts to contact when sending reports from the host panel or communicator. The communicator supports communication with up to two receivers.

Note: If you select **YES** for any of the receiver 2 options, you must have at least one IP address programmed in receiver 2 programming. The receiver 2 defaults are set to **NO**.

ALARM **NO** YES

ALARM REPORTS

Choose **YES** to enable Abort, Alarm, Alarm Restoral, Alarm Bell Silenced, Ambush, Exit Error, and System Recently Armed reports to be sent to this receiver.

Choose **NO** to disable sending these reports to the receiver. The default is **NO**.

SPV/TRBL **NO** YES

SUPERVISORY/TROUBLE REPORTS

Choose **YES** to enable Supervisory, Trouble, Trouble Restoral, Force Armed, Late to Close, and Fault reports to be sent to this receiver.

Choose **NO** to disable sending these reports to the receiver. The default is **NO**.

O/C USER **NO** YES

OPENING/CLOSING AND USER REPORTS

Choose **YES** to enable Opening/Closing, Schedule and Code Changes, and Bypass reports by user to be sent to this receiver.

Choose **NO** to disable sending these reports to the receiver. The default is **NO**.

TEST RPT **NO** YES

TEST REPORT

Choose **YES** to enable the recall test report from the host panel and/or communicator to be sent to the receiver.
Choose **NO** to disable sending this report to the receiver. The default is **NO**.

FIRST IP ADDR
000.000.000.000

FIRST IP ADDRESS

Enter the first (primary) IP address where the communicator sends messages. Enter all 12 digits and leave out the periods. For example, enter IP address 192.168.0.250 as 192168000250. The periods display automatically.

FIRST IP PORT
2001

FIRST IP PORT

Enter the first IP port number to be used with the first IP address. The IP port identifies the port used to communicate messages with the panel. The default IP port setting is **2001**.

SECOND IP ADDR
000.000.000.000

SECOND IP ADDRESS

Enter the second IP address where the communicator sends messages. Enter all 12 digits and leave out the periods. The periods display automatically.

SECOND IP PORT
2001

SECOND IP PORT

Enter the second IP port number to be used with the second IP address. The IP port identifies the port used to communicate messages with the panel. The default port is **2001**.

NETWORK OPTIONS

NETWORK OPTIONS

DHCP NO **YES**

DHCP MODE ENABLED

Choose **YES** if the communicator uses a dynamic IP address. The communicator will operate in DHCP and will not use the local IP address number. The default is **YES**.

Choose **NO** to have the communicator use the IP address entered in local IP address.

LOCAL IP ADDR
192.168.0.250

LOCAL IP ADDRESS

Enter the local IP address for the communicator. The local IP address must be unique and cannot be duplicated on the network. The default local IP address is **192.168.0.250**.

GATEWAY ADDR
192.168.0.1

GATEWAY ADDRESS

Enter the local gateway address. The gateway IP address is needed to exit the local network. The default gateway address is **192.168.0.1**.

SUBNET MASK
255.255.255.0

SUBNET MASK

Enter the local subnet mask assigned to the communicator. The default subnet mask address is **255.255.255.000**.

DNS SERVER
0.0.0.0

DNS SERVER

Enter the IP address of the DNS (Domain Name System) used by the communicator to resolve domain names into IP addresses. The default address is **0.0.0.0**.

PROGRAMMING PORT **2001**

PROGRAMMING PORT

Enter the programming port number. The programming port identifies the port used to communicate messages to and from the communicator. The default programming port setting is **2001**.

REMOTE OPTIONS

REMOTE OPTIONS

This option allows you to enter the information needed for remote command/remote programming operation.

RMT KEY:

REMOTE KEY

Enter a code of up to eight digits for use in verifying the authority of a receiver to perform a remote command/programming session. The receiver must give the correct key to the communicator before access will be granted. All communicators are shipped from the factory with the remote key preset as blank.

To enter a new remote key, press any select area and enter any combination of up to 8 digits. The numbers you enter appear as asterisks.

DISARM NO **YES**

REMOTE DISARM

Choose **YES** to enable the communicator to be disarmed remotely. The default is **YES**.

Choose **NO** to disable remote disarming.

APP KEY:

APP KEY

Enter the 8-digit app key obtained in your dealer settings on Dealer Admin. This option is a security feature of the Virtual Keypad app and is used only when your dealer settings have **EASYconnect** set as the communication type. This option is used to eliminate the need for a static IP address programmed in network options. To enter a new App Key, press any select area and enter any combination of 8 digits. The default is blank.

SYSTEM REPORTS

SYSTEM REPORTS

This option allows you to select which reports the communicator sends to the receiver.

O/C RPTS **NO** YES

OPENING/CLOSING REPORTS

Choose **NO** to prevent sending opening/closing reports.

Choose **YES** to send opening/closing reports for each programmed area. The default is **NO**.

RESTORAL
NO **YES** DISARM

ZONE RESTORAL REPORTS

Specify whether the communicator sends zone restoral reports and when they will be sent.

Choose **NO** to prevent sending restoral reports from the communicator.

Choose **YES** to enable the communicator to send zone restoral reports when a zone restores from an alarm or trouble condition. The default is **YES**.

Note: The communicator sends zone restoral reports when a zone that has restored from an alarm or trouble is disarmed. Twenty-four hour zones send restorals immediately.

SEND STORED
MESSAGES? **NO** YES

SEND STORED MESSAGES

If a communicator loses communication with the receiver, it will store any messages that are not able to be sent while communication was down. Selecting YES allows the communicator to send all stored messages to the receiver once communication is restored. The time at which each message was generated is also sent. Default is **NO**.

SYSTEM
INFO **NO** YES

SEND SYSTEM INFORMATION

If **YES** is selected, the panel family and panel serial number appear as additional identifiers on the end of the Serial 3 message sent to the monitoring center. The addition of the panel family and panel serial number helps monitoring center operators identify the correct system if two panels unintentionally use the same account number.

If **NO** is selected, the Serial 3 message does not include the panel family or panel serial number identifiers. Default is **NO**.

Note: This feature requires a SCS-VR Virtual Receiver or an SCS-1R Network Enabled Receiver with the SCS-150 Main Processor Card at firmware Version 108 (9/23/25).

SYSTEM OPTIONS

SYSTEM OPTIONS

This option allows you to select system wide parameters used in the operation of the communicator system.

ENTRY DLY 1: **30**

ENTRY DELAY 1

Enter the entry delay time for all exit type zones programmed. When an armed exit type zone is faulted, the area must be disarmed before the entry delay expires or a fault will be detected. All burglary type zones are delayed along with the exit zone. Entry delay times range from 30-250 seconds. The default is **30** seconds.

EXIT DELAY: **60**

EXIT DELAY

Enter the exit delay time for all exit type zones. When the exit delay time starts, all activity on exit and burglary zones is ignored until the exit delay expires. During exit delay, if an exit zone trips, then restores, and trips again, the exit delay timer restarts. This restart can occur only once. Exit delay times can be from 30-250 seconds. The default is **60** seconds.

Exit Error Operation: At arming, when an entry/exit zone (**EX**) faults at the end of the exit delay, a zone alarm and an exit error are sent to the receiver.

CRS ZONE TM:
0

CROSS ZONE TIME

Enter the time allowed between zone faults. When a zone programmed for cross zoning faults, the communicator begins counting down the cross zone time entered here. If the same zone or another cross-zoned zone faults within this time, an alarm report is sent to the receiver.

If the cross zone time expires without the second zone fault, only a zone fault report from the first zone is sent to the receiver. The cross zone time can be from 4-250 seconds in one second increments. Enter **0** to disable the cross zone time feature. See Cross Zoning.

PWR FAIL HRS: 1

POWER FAIL DELAY

Enter the time allowed for a power failure to occur before sending a report. The delay time can be from 1-9 hours. When the power is off for the programmed delay time, a power failure report is sent to the receiver. For example, if the power failure delay is set for two hours, then the power failure report will be sent between 2-3 hours. Entering **0** sends the power failure report within 15 seconds.

SWGRBYPS TRIPS: 2

SWINGER BYPASS TRIPS

Enter the number of times (1-6) a zone can go into an alarm or trouble condition within one hour before being automatically bypassed. Bypassed zones are automatically reset when the area they are assigned to is disarmed. All 24-hour zones are reset when any area of the system is disarmed. A programming stop operation restores a bypassed zone. Entering 0 disables this function. The default is **2**.

How it works

The communicator hour timer starts at 59 minutes past the hour. If the hour timer expires before the trip counter is exceeded, the trip counter returns to 0. If the trip counter is exceeded before the hour expires, the zone is automatically bypassed by the communicator. A bypass report is sent to the receiver if bypass reports is set to **YES**.

RST SBYP **NO** YES

RESET SWINGER BYPASS

Choose **YES** to reset an automatically bypassed zone when it remains in normal condition for one hour after being bypassed. A report of the automatic reset is sent to the receiver.

Choose **NO** to disable automatic reset of a bypassed zone. The default is **NO**.

REQUEST TIME CHG
NO **SCS** SCW

TIME CHANGES

This option allows the panel to request automatic time changes from SecureCom Wireless® or the DMP SCS-1R or SCS-VR Receiver on Path 1. For the SCS receiver to send time changes, program it to send time changes and receive time change updates from the network automation computer at least every 24 hours. The default is **SCS**.

Select **NO** to not request time changes.

Select **SCS** to request time changes from the SCS-1R or SCS-VR Receiver.

Select **SCW** to request time changes from SecureCom Wireless.

This option only displays if you selected SCW. The default is YES.

DST?
NO **YES**

Select **NO** to not observe daylight saving time.

Select **YES** to observe daylight saving time.

HRS FROM GMT: **6**

HOURS FROM GMT

When time zone is programmed **YES**, enter the number (0-23) that indicates the Greenwich Mean Time zone (GMT) where the communicator is located. The default is **6**. See Table 2 for GMT values.

GMT	CITY/TIME ZONE	GMT	CITY/TIME ZONE
0	London, Monrovia, Lisbon	12	Fiji, Marshall Island, Wellington
1	Cape Verde Island, Azores	13	New Cadelonia
2	Mid-Atlantic	14	Guam, Sydney
3	Buenos Aires, Georgetown	15	Tokyo, Seoul
4	Atlantic Time (Canada), Caracas	16	Hong Kong, Singapore
5	Eastern Time (US, Canada) Bogota	17	Bangkok, Hanoi
6	Central Time (US, Canada) Saskatchewan	18	Dhaka, Almaty
7	Mountain Time (US, Canada), Edmonton	19	Islamabad, Karachi
8	Pacific Time (US, Canada), Tijuana	20	Abu Dhabi, Kazan
9	Alaska	21	Moscow, Bagdad
10	Hawaii	22	Eastern Europe
11	Midway Island, Samoa	23	Rome, Paris, Berlin

Table 2: GMT Time Zones

HST FORMAT
CID 4-2 SIA

HOST FORMAT

Select the option the panel receives from the tip and ring connection.

Select **CID** to receive messages as DMP string with raw CID message appended. Select **4-2** to receive messages in 4-2 format. Select **SIA** to receive messages in SIA format. The default is **CID**.

CID FORMAT
DMP CID

CID FORMAT

This option displays if you selected **CID** for **Host Format**.

Select **DMP** to send CID messages as Serial 3 format. Select **CID** to send messages as DMP string with raw CID message appended. Refer to Figure 16. Default is **DMP**.

This feature requires SCS-VR Version 1.4.6 and higher or SCS-150 Version 107 and higher.

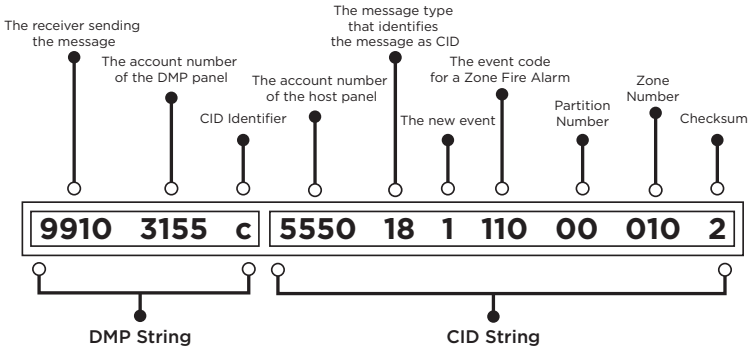

Figure 9: CID Format Option

OUTPUT OPTIONS

OUTPUT OPTIONS

This option allows you to program communicator output options. Switched ground (open collector) outputs are available using terminals O1 and O2 as the ground and your control panel for power. Select from outputs 1 or 2.

CO OUTS: - -

CUTOFF OUTPUTS

Define the operation of the two on-board outputs. For each programming option, enter the output you wish to activate or 0 for no output. Either or both of the outputs can be programmed here to turn off after the time specified in output cutoff time. To disable this option, press any select area to clear the display of output numbers and then press **CMD**.

CUTOFF TIME: 0

OUTPUT CUTOFF TIME

If a cutoff output is assigned, you can enter a cutoff time for the output to remain on up to 15 minutes. If the output is turned off manually, the cutoff time is reset. The cutoff time can be 1-15 minutes. Enter 0 to provide continuous output.

Note: The output is cutoff within 60 seconds of the programmed cutoff time.

The cutoff timer is shared by all outputs. If a second output trips, the timer is not reset. Both outputs turn off when the original time expires.

COMM FAIL OUT: 0

COMMUNICATION FAILURE OUTPUT

This output/favorite turns on when the communicator fails to communicate with the receiver. To turn off communication failure output, disarm the communicator. Enter 0 to disable this output.

ARMED OUT: 0

ARMED OUTPUT

This output/favorite turns on any time an area of the system is armed. The output turns off when the system completely disarms. Enter 0 to disable this output.

RMT ARMG OUT: 0

REMOTE ARMING OUTPUT

When the system is armed or disarmed remotely from the Virtual Keypad App, VirtualKeypad.com, Remote Link, or from a schedule, this output turns on momentary for 0.75 seconds then turns off. This output can be used for panels that require a momentary short to an arming zone to arm and a momentary short to disarm.

AREA INFORMATION

AREA INFORMATION

This option allows you to assign functions to the area of the communicator. All non-24-hour zones must be assigned to an active area. See Zone Information for more information.

AREA NO: -

AREA NUMBER

Enter the number of the area you wish to program. Select from areas 1-6.

* UNUSED *

AREA NAME

Only those areas given names can have zones assigned to them. All others are marked *__UNUSED__*. See Letters and Special Characters for more information.

To add an area name to the system, press any select area and enter up to 16 characters for the new name. Press **CMD** to continue. To mark an active area as unused, delete the old name by pressing any select key then press **CMD**. The communicator automatically sets the name as *__UNUSED__*. If you have already initialized the communicator, all areas will be marked as *__UNUSED__*.

AUTO ARM **NO** YES

AUTOMATIC ARMING

Choose **YES** to allow this area to arm automatically according to the opening and closing schedule. At arming, faulted zones are handled according to the option selected in bad zones. If a closing report is sent, the user number is indicated as **SCH** on the SCS-1R or SCS-VR receivers.

Choose **NO** to disable automatic arming for this area. The default is **NO**.

BAD ZONES: **BYP**
BYP FORC REF

Bad Zones

At the time of automatic arming, some zones in the area may not be in a normal condition. This option allows you to program the panel's response to these bad zones. This option is not displayed if **AUTO ARM** is **NO**.

BYP: All bad zones are bypassed. A report of the bypass is sent to the receiver if bypass reports has been set as **YES**. The report indicates **SCH** as the user number.

FORC: All bad zones are force armed. Zones force armed in a bad condition are capable of restoring into the system and reporting alarms if tripped. A report of the force arm is sent to the receiver. The report indicates the user number as **SCH**.

REF: The automatic arming is refused and no arming takes place. Closing report is sent to the receiver.

AUTO DIS **NO** YES

AUTOMATIC DISARMING

Choose **NO** to disable automatic disarming by schedule for this area. The default is **NO**.

Choose **YES** to allow this area to automatically disarm according to a schedule. If an opening report is sent to the receiver, the user number is indicated as **SCH**.

ZONE INFORMATION

ZONE INFORMATION

This allows you to define the operation of each protection zone used in the system.

ZONE NO: -

ZONE NUMBER

The communicator has four zones to program. Enter the number of the zone you intend to program. To program zone 4, see Zones 1-4 Input Connection. Press **CMD** to enter a zone name. See Letters and Special Characters.

* UNUSED *

ZONE NAME

Press any select area and enter up to 16 characters for the zone name. A name must be given to each zone in the system. The zone name is sent to the receiver as part of a zone event report. A zone that is not part of the system must be marked *__UNUSED__*. To mark a zone unused, delete the old name by pressing any select area, then press **CMD**. The programmer automatically programs the name as *__UNUSED__*. If you selected **ZONES NO YES** to clear the communicator's memory during initialization, the zones will already be marked *__UNUSED__*. See Initialization.

ZONE LOCATION

ZONE LOCATION

This feature is optional and allows you to specify a zone location, separate from the zone name. Enter a descriptive location for the zone, such as 2nd Floor East Wing. The zone location is only sent to the monitoring center to help dispatchers identify where an alarm is triggered and does not display on the keypad. You can enter up to 16 characters for the zone location name.

ZONE TYPE: BLANK

ZONE TYPE

The zone type defines the response of the communicator to the zone being open or short. When you assign a zone type to a zone, responses are made automatically for the zone. There are 13 zone types to choose from, including Blank.

To select a new zone type, press any select area. The display lists the four zone types shown below. When the zone type you want to select displays, press the select area below or on the name.

--	NT	DY	EX
FI	PN	EM	SV
A1	A2	AR	FV
HU			

Blank (**--**), Night (**NT**), Day (**DY**), or Exit (**EX**). Press **CMD** to display additional zone types.

Fire (**FI**), Panic (**PN**), Emergency (**EM**), or Supervisory (**SV**). Press **CMD** to display additional zone types.

Auxiliary 1 (**A1**), Auxiliary 2 (**A2**), Arming (**AR**), or Fire Verify (**FV**). Press **CMD** to display additional zone types.

Holdup (**HU**). Press the back arrow to display the previous zone types.

If you select Blank, Night, Day, Exit, Auxiliary 1, or Auxiliary 2 as the zone type, the zone must be assigned to an area. See Zone 1-4 Input Connection. If you select Fire, Panic, Holdup, Emergency, or Supervisory as the zone type, these are 24-hour zones that are always armed and no area assignment is needed.

AREA NO: 1

AREA ASSIGNMENT

All non-24-hour zones are automatically assigned to area 1. Enter the area number from 1-6 where this zone is being assigned.

AREA: 1 - - - - -

ARMING ZONE ASSIGNMENT

Specify the areas to be armed by the arming type zone. Press the appropriate numbers on the keypad to assign areas 1-6. When disarmed, all areas are disarmed.

STYLE: **TGL**

STYLE

Specify the style for the arming/disarming operation. The default style is **TGL** (Toggle). Press any select area to display the style options. To view more style options, press **CMD**. The following is a description of the action for each option condition.

TGL ARM DIS STEP

TGL (Toggle): When the zone changes from normal to shorted, the programmed areas toggle between the armed or disarmed condition. When restored to normal, no action occurs. When the zone is opened from a normal (disarmed) state, trouble is reported. When opened from a shorted (armed) state, an alarm is reported and the zone is disabled until you disarm the area(s) from either the Virtual Keypad App, VirtualKeypad.com, or Remote Link.

ARM: When the zone is shorted, the programmed area is armed. When restored to normal, no action occurs. When the zone is opened from a normal (disarmed) state, trouble is reported. When opened from a shorted (armed) state, an alarm is reported.

DIS (Disarm): A short will disarm the area. When restored to normal, no action occurs. When the zone is opened from a normal (disarmed) state, trouble is reported.

STEP: A short will arm the areas. A normal condition will cause no action. An open condition will disarm the areas. When using an arming/disarming keyswitch, locate the keyswitch within the protected area.

MNT

MNT (Maintain): When the zone is shorted, the programmed area is armed. When restored to normal, the area is disarmed and any alarm bells are silenced. When the zone is opened from a normal (disarmed) state, trouble is reported. If opened from a shorted (armed) state, an alarm is reported and the zone is disabled until you disarm the area from either the Virtual Keypad App, VirtualKeypad.com, or Remote Link.

NEXT ZN? NO YES

NEXT ZONE

Choose **YES** to terminate the programming for a zone. You may enter a new zone number when **ZONE NO**: - appears on the display.

Choose **NO** to make changes to the alarm action for a zone.

ALARM ACTION . . .

ALARM ACTION

Change the default alarm characteristics of a zone type. If you selected the non-24-hour zone type Blank, Night, Day, Exit, Auxiliary 1, or Auxiliary 2, the alarm action programming begins with Disarmed Open. If you selected the 24-hour zone type Panic, Emergency, or Supervisory, the alarm action programming begins with Armed Open.

DISARMED OPEN

DISARMED OPEN

Define the action taken by the communicator when the zone is opened while the area is disarmed. There are three actions to define: Message to Transmit, Output/Favorite Number, and Output Action.

You must also make these selections for the Disarmed Short, Armed Open, and Armed Short zone conditions.

MSG: **ALARM**

MESSAGE TO TRANSMIT

You can send two report types to the receiver: Alarm and Trouble. These are represented by the characters **A** and **T**. Press any select area to display the zone report options.

A T L -

ALARM: Select **A** to allow an alarm report to be sent to the receiver. The zone name appears in the communicator's alarmed zones status lists.

TROUBLE: Select **T** to allow a trouble report to be sent to the receiver and the zone name to appear in the communicator's alarmed zones status lists.

LOCAL: Select **L** to prevent sending an alarm report to the receiver. The zone name appears in the communicator's alarmed zones status lists.

– (dash): Select – to prevent sending reports to the receiver. There is no display in the communicator's alarmed zones status list. Only the programmed output number activates.

OUTPUT NO:

OUTPUT NUMBER

Specify an output/favorite on the communicator to activate with a zone condition. The output/favorite can be activated regardless of the report to transmit or whether or not the zone is programmed as local. An output activated by a non-24-hour armed zone is turned off when the zone's area is disarmed by a user. To enter an output number, press any select area followed by the output number 1 or 2.

ACTION:

STD PLS MOM FLW

OUTPUT ACTION

Enter an output number to display this option. This option allows you to assign an output action to the output. A description of the available output actions follows:

STD (steady): The output is turned on and remains on until the area is disarmed, an output cutoff time expires, or the output is reset from the keypad user menu.

PLS (pulse): The output alternates one second on, one second off until the area is disarmed, an output cutoff time expires, or the output is reset from the keypad user menu.

MOM (momentary): The output is turned on only once for one second.

FLW (follow): The output is turned on and remains on while the zone is in off, normal, or bad condition. When the zone restores, the output is turned off.

After you have selected the message to transmit, the display prompts you for the same three selections for Disarmed Short, Armed Open, and Armed Short conditions. If the zone is a 24-hour type, only the Armed Open and Armed Short conditions are displayed. When you have programmed all of the zone conditions, the panel displays the swinger bypass selection.

SWGR BYP NO **YES**

SWINGER BYPASS

Choose **YES** to allow the zone to be swinger bypassed by the communicator according to the programming in swinger bypass trips and reset swinger bypass.

Choose **NO** to disable swinger bypassing for this zone.

How it works
If within one hour, a zone trips the total number of times as specified in swinger bypass trips, the communicator bypasses it until the following conditions occur:

- The area in which the zone is assigned is disarmed.
- The zone is manually reset through the bypass zones keypad user menu function.
- The zone remains normal for one hour and reset swinger bypass is set to **YES**.

If the zone trips fewer than the specified times within one hour of the first trip, the bypass trip counter returns to 0 and the process must be repeated. A report of the swinger bypass is sent to the receiver if bypass reports is set to **YES**.

CRS ZONE **NO** YES

CROSS ZONE

Choose **YES** to enable cross zoning for this zone. Cross zoning requires this zone to trip twice, or this zone and another cross-zoned zone to trip, within a programmed time before an alarm report is sent to the receiver. To operate correctly, all cross-zoned zones need to be programmed as the same zone type.

When a cross-zoned zone trips, the output action assigned to the zone activates. The cross zone time specified in system options begins to count down. See Cross Zone Time. If another cross-zoned zone in the system faults, or if the first zone restores and faults again before the cross zone time expires, the bell turns on and the communicator sends an alarm report.

If no other cross-zoned zone in the system trips before the cross zone time expires, the communicator sends only a fault report from the first zone to the receiver. If cross zone is set to yes, a valid cross zone time must be programmed for this feature.

Choose **NO** to disable cross zoning for this zone. The default is **NO**.

RECEIVER ROUTING

NORMAL

NORM 1 2 BOTH

RECEIVER ROUTING

This option displays if zone type is set for Auxiliary 1 or Auxiliary 2. Press any select area to select the receiver routing for the selected zone.

Select **NORM** to send alarm and supervisory/trouble messages from this zone to receiver 1 or receiver 2 as programmed within the receiver in communications.

Select 1 to send alarm and supervisory/trouble messages from this zone to receiver 1 only, regardless of the programming for the receiver in communications.

Select 2 to send alarm and supervisory/trouble from this zone to receiver 2 only, regardless of the programming for that receiver in communications.

Select **BOTH** to send alarm and supervisory/trouble from this zone to both receivers, regardless of the programming for either receiver in communications.

ZONE NO: -

ZONE NUMBER

Enter the zone number you want to program next. Return to Zone Information and follow the descriptions of each programming option. If all zones are programmed, press the back arrow at the **ZONE NO** display to continue.

STOP

STOP

STOP

Press any select area to exit the programmer function of the communicator. When selected, the communicator performs an internal reset and exits the programmer.

SET LOCKOUT CODE

SET LOCKOUT CODE

SET LOCKOUT CODE

Press **CMD** at the stop option to display **SET LOCKOUT CODE**. This feature allows you to program a special code that will be required to gain access to the communicator's internal programmer through the keypad.

Changing the Lockout Code

You can change this code at any time to any combination of numbers from 1-5 digits long (1-65535). Do not use leading zeros for the lockout code.

1. Press any select area. The keypad displays **ENTER CODE**.
2. Enter a 1-5 digit code and press **CMD**.

Note: Do not enter a number higher than 65535.

3. Enter the new lockout code you just entered in the keypad and press **CMD**. The keypad displays **CODE CHANGED**.

Once you have changed the code, it is important that you write it down and store it in a safe place. Lost lockout codes require the communicator to be sent back into DMP for repair. You may cancel a lockout code by entering **00000** at the set lockout code command option.

APPENDIX

This section provides additional zone and system information.

Diagnostics Function

The communicator contains a diagnostics function that allows you to test the integrity of the cellular communication and check panel settings. To use diagnostics, reset the communicator and enter the diagnostics code **2313** (DIAG).

Carrier Selection

This option is only available when DualSIM is active. In the event that remote connectivity is unavailable, carrier options can be manually switched on the keypad. To select a single carrier, press **ATT** or **VZW.** To use DualSIM operation, select **BOTH.**

Signal Strength Test

If DualSIM is activated**,** the panel automatically selects a primary carrier (AT&T or Verizon) when the panel is turned on. Once the primary is established, the panel tests the signal strength of the primary every hour. During the test, if the primary's signal drops by 10db or more, the panel then tests the backup carrier. If the backup has a stronger signal, it becomes the new primary. Every five hours, the panel automatically tests the backup's signal strength to determine the stronger signal.

Communication Status

This option tests the individual components of cellular or network communication. The selected test will proceed until the first component failure or until all components have been tested with positive results. The test screen will display after each component and will be displayed for two seconds or until **CMD** has been pressed.

Note: If DualSIM is active, an option to select **ATT** or **VZW** appears before testing proceeds. Select one of the carriers to test it.

Cellular Results:

Successful Display	Failure Display
MODEM OPERATING	NO MODEM FOUND
IDENTIFIED	NO SIM CARD
TOWER DETECTED	NO TOWER
REGISTERED	NOT REGISTERED

SIGNAL: ▌▌▌▌▌▌▌
CONTINUE? NO YES

This displays the cellular signal strength of the nearest tower for the SIM card carrier. The ▌'s represent the signal strength 0-7. Select YES to continue through the remaining component tests. Select NO to stop testing and return to the COMM STATUS option.

Successful Display	Failure Display
CONNECTED	CONNECT ERROR
	NOT ACTIVATED
COMM PATH GOOD	NO ACK RECEIVED

Panel Settings

Press a top row key to access the MAC address, serial number, model, and firmware version.

Serial Number

This number is the communicator serial number. Reference this number for communicator date-of-manufacture and hardware version. Press any select area to display the serial number.

Model Number

This menu option displays the model number of the communicator.

Firmware Version

This menu option displays the firmware version number of the communicator and date it was released.

Contact ID Recvd

This displays DTMF digits dialed from the control panel.

Exiting the Diagnostics Program

Press **CMD** until **STOP** displays. Press any select area. The keypad returns to the status list display.

Using the 984 Command Function

When not in the programming menu, the function **984** + **CMD** can be entered at the keypad. The remote options menu appears. This menu contains the following options:

NET

The communicator allows you to perform a test on each component of the network communication paths. While the Status List displays, enter 984 and press **CMD**. The keypad display changes to **NBR PICKUP NET CELL**. Press the select area under **NET** to allow the panel to perform a Communication Status Test.

Upon entry of a network path when prompted, the test runs and the results display on the keypad in the order they were tested: **LINK**, **DHCP**, **GATEWAY**, **DEST**, **NET COMM**.

Network Results:

Successful Display	Failure Display
LINK OK	LINK ERROR
DHCP OK	DHCP ERROR
GATEWAY FOUND	NO GATEWAY
DEST FOUND	NO DESTINATION
COMM PATH GOOD	NOT CONNECTED NO ACK RECEIVED

Note: If **NET** is not a communication option on the panel, **NO NETWORK** displays on the keypad and you are returned to the Status List.

CELL

The communicator allows you to perform a test on each component of the cellular communication paths. While the status list displays, enter **984** and press **CMD**. Press the select area under **CELL** to allow the communicator to perform a communication status test. The keypad displays **CELL IS BUSY** if the modem is being tested from another keypad.

Upon entry of a cellular path when prompted, the test runs and the results display on the keypad in the order they were tested: **MODEM OPERATING**, **IDENTIFIED**, **TOWER DETECTED**, **REGISTERED**, **CONNECT SUCCESS**, and **CELL COM GOOD**. Press **CMD** to advance through the results. Refer to the table in Cellular Results for more information.

Using the Walk Test

The walk test feature allows a single technician to test all zones on the system. Conduct the walk test within 30 minutes of resetting the communicator. The walk test automatically ends if no zones are tripped for 20 minutes. **TEST IN PROGRESS** displays at all keypads. When five minutes remain, **TEST END WARNING** displays. If any areas are armed, the walk test does not start and **SYSTEM ARMED** displays.

```
WALK TEST
```

WALK TEST

To conduct the walk test, reset the communicator by momentarily pressing the reset button. From the keypad, enter **8144**. The keypad displays **WALK TEST**. If the system is monitored , the system sends a system test begin report to the central station. All programmed zones are included in the test.

```
WALK TEST
TRIPS: XXX      END
```

TRIP COUNTER FOR WALK TEST (STD)

Displays the number of zone trips during the walk test. Each time a selected zone trips, the keypad buzzes.

END - Press this select area to stop the walk test. When the walk test ends or a 20 minute timeout expires, a final sensor reset occurs. The system test end message is sent to the receiver along with verify and fail messages for each zone under test. Faulted zones display on the keypad.

```
TEST END WARNING
```

TEST END WARNING

When no zones have been tripped and five minutes remain on the 20 minute walk test timer, the keypad displays **TEST END WARNING** and the keypad tones. If no additional test zone trips occur, the test ends and a final sensor reset automatically occurs. The system test end message is sent to the receiver along with verify and fail messages for each zone under walk test. Faulted zones display on the keypad.

```
SOUTH LOBBY
ZONE: 10        -FAIL
```

FAILED ZONES DISPLAY

Each zone that did not trip at least once during the walk test displays on the keypad that initiated the test. Any Panic (**PN**) or Supervisory (**SV**) 24-hour zone that is faulted at the end of the walk test displays a trouble condition for that zone regardless of the message programmed for the open or short condition of the zone and a zone trouble is sent to the receiver. Press **CMD** to display the next failed zone.

Cross Zoning

Caution must be taken when cross zoning devices to ensure that the cross zone time is long enough to allow a trip of both zones before it expires. A cross zone time that is too short may allow a trip of the zones and only a zone fault report be sent to the central station.

When a cross zoned zone trips, a FAULT report is sent to the SCS-1R or SCS-VR receivers. When two cross zoned zones trip within the cross zone time, both zones send ALARM signals to the receiver. For example, if zones 1 and 2 are cross zoned zones, and only zone 1 trips, a FAULT report is sent to the receiver for zone 1. If zone 1 trips and zone 2 trips within the cross zone time, an ALARM report is sent to the receiver for zone 1 and zone 2.

Note: To operate correctly, all cross-zone zones need to be programmed as the same zone type.

ADDITIONAL INFORMATION

Replace the Backup Battery

The PowerCom's rechargeable battery provides up to 24 hours of backup battery power when AC or DC power is not available. The battery is intended for backup power only. It should not operate the PowerCom on a daily basis. If the battery is low, or not plugged into the battery connector, a low battery condition is indicated.

Replace the battery every three years. Use the steps below to remove and install a new backup battery:

1. Remove the PowerCom from the backbox.
2. Disconnect the battery lead connector from the PowerCom battery header.
3. Remove the battery from the backbox.
4. Place the new battery in the backbox and route the battery wires through the cutouts.
5. Connect the new battery lead connector to the PowerCom battery header.
6. Install the PowerCom on the backbox.

Note: The PowerCom is shipped with double sided tape that can be used to install the backup battery. Do not use double sided tape for listed installations.

FCC NOTICE

This device complies with part 15 of the FCC Rules. Operation is subject to the following two conditions:

1. This device may not cause harmful interference.
2. This device must accept any interference received, including interference that may cause undesired operation.

The antenna(s) used for this transmitter must be installed to provide a separation distance of at least 20 cm from all persons.

This equipment has been tested and found to comply with the limits for a Class B digital device, pursuant to part 15 of the FCC Rules. These limits are designed to provide reasonable protection against harmful interference in a residential installation. This equipment generates, uses and can radiate radio frequency energy and, if not installed and used in accordance with the instructions, may cause harmful interference to radio communications. However, there is no guarantee that interference will not occur in a particular installation.

If this equipment does cause harmful interference to radio or television reception, which can be determined by turning the equipment off and on, the user is encouraged to try to correct the interference by one or more of the following measures:

- Reorient or relocate the receiving antenna.
- Increase the separation between the equipment and receiver.
- Connect the equipment into an outlet on a circuit different from that to which the receiver is connected.
- Consult the dealer or an experienced radio/TV technician for help.

Changes or modifications not expressly approved by the party responsible for compliance could void the user's authority to operate the equipment.

If necessary, the installer should consult the dealer or an experienced radio/television technician for additional suggestions. The installer may find the following booklet, prepared by the Federal Communications Commission, helpful:

"How to Identify and Resolve Radio-TV Interference Problems."

This booklet is available from the U.S. Government Printing Office, Washington D.C. 20402

Stock No. 004-000-00345-4

INDUSTRY CANADA

This device complies with Industry Canada license-exempt RSS standard(s). Operation is subject to the following two conditions: (1) this device may not cause interference, and (2) this device must accept any interference, including interference that may cause undesired operation of the device.

Le présent appareil est conforme aux CNR d'Industrie Canada applicables aux appareils radio exempts de licence. L'exploitation est autorisée aux deux conditions suivantes : (1) l'appareil ne doit pas produire de brouillage, et (2) l'utilisateur de l'appareil doit accepter tout brouillage radioélectrique subi, même si le brouillage est susceptible d'en compromettre le fonctionnement.

NFPA 72

This equipment should be installed in accordance with Chapter 29 of the National Fire Alarm Code, ANSI/NFPA 72, (National Fire Protection Association, Batterymarch Park, Quincy, MA 02269). Printed information describing proper installation, operation, testing, maintenance, evacuation planning, and repair service is to be provided with this equipment.

Warning: Owner's instruction notice, not to be removed by anyone except occupant.

Specifications

PowerCom Series

Primary Power	Nominal 12 - 24 VDC
Current Draw at 12 VDC	
Standby	75 mA
Alarm	280 mA Peak Cellular Communication

Dimensions and Color

Housing Dimensions	5.50” W x 3.75” L x 1.00” H
Housing Color	Red (R)

Ordering Information

POWERCOMF-A	Network and LTE (AT&T)
POWERCOMF-V	Network and LTE (Verizon)
POWERCOMF-2	Network and LTE (AT&T and Verizon)
POWERCOM-2	Network and LTE (AT&T and Verizon)
POWERCOMF-FN	Network and LTE (AT&T FirstNet)

Note: To use FirstNet with the PowerComF-FN, a TMA Certificate of Verification that verifies compliance with accepted Alarm Industry Standards is required. Learn more at tma.us/programs/firstnet and tma.us/programs/iq.

Accessories

383P	Cellular Paddle Antenna LTE

Certifications for PowerCom Series

Cellular

FCC Part 15: XMR201707BG96
XMR201910BG95M3
IC: 10224A-201709BG96
10224A-2019BG95M3

Underwriters Laboratories (UL) Listed

PowerComF Series

ANSI/UL 864 Fire Protective Signaling Systems (CID Capture/Zone Capture)

PowerCom-2

ANSI/UL 2610 Central Station Burglar

Designed, engineered, and manufactured using U.S. and global components in Springfield, MO.

LT-2815 26113

© 2026

INTRUSION • FIRE • ACCESS • NETWORK
2500 North Partnership Boulevard
Springfield, Missouri 65803-8877
800.641.4282 | DMP.com