INSTALLATION AND PROGRAMMING GUIDE

CellCom™ Series Communicator

Digital Monitoring Products, Inc.

© 2026

TABLE OF CONTENTS

About the Communicator 1

System Components 1

Terminals 1

Programming (PROG) Connection 2

Tamper 2

Reset Button 2

Load Button 2

Backlit Logo 3

ECP and DSC Passthru 3

Installation 4

Select a Location 4

Mount the Communicator 4

Wire the Communicator 5

Connect the Antenna 5

Applications 6

CID and 4-2 Dialer Connection 6

Communication Failure (CellComF Series only) 6

Zones 1-4 Input Connection 6

Zone 4 Bell Connection 7

ECP Passthru Connection 9

DSC Passthru Connection 11

Additional Applications 12

Use Outputs 12

Activate the Cellular Module 13

Dealer Admin Activation 13

Remote Link Activation 13

Programming 14

Before You Begin 14

Getting Started 14

Programming Menu 14

Reset Timeout 15

Special Keys 15

Letters and Special Characters 16

Current Programming 16

Initialization 17

Clear All Codes 17

Clear All Schedules 17

Clear Events 17

Clear Zone Programming 17

Clear Communication 17

Set to Factory Defaults 17

Communication 18

Account Number 18

Transmission Delay 18

Communication Type 18

Test Time 18

Cell Test Days 18

Check-In Minutes 18

Fail Time Minutes 18

Receiver 1 Programming 18

Receiver 2 Programming 19

Remote Options 20

Remote Key 20

Remote Disarm 20

System Reports 20

Opening/Closing Reports 20

Zone Restoral Reports 20

Send System Information 20

System Options 21

Entry Delay 1 21

Exit Delay 21

Cross Zone Time 21

Power Fail Delay 21

Swinger Bypass Trips 21

Reset Swinger Bypass 21

Time Changes 21

Hours from GMT 22

Host Input 22

ECP Partition Number 22

Host Format 22

CID Format 23

Output Options 24

Cutoff Outputs 24

Output Cutoff Time 24

Communication Failure Output 24

Armed Output 24

Remote Arming Output 24

Area Information **25**
Area Number 25
Area Name 25
Automatic Arming 25
Automatic Disarming 25
Zone Information **26**
Zone Number 26
Zone Name 26
Zone Location 26
Zone Type 26
Next Zone 27
Alarm Action 27
Disarmed Open 27
Message To Transmit 27
Output Number 27
Output Action 28
Swinger Bypass 28
Cross Zone 28
Receiver Routing 28
Zone Number 28
Stop **29**
Set Lockout Code **29**
Stop 29
Set Lockout Code 29
Arming and Disarming **30**
Use the Virtual Keypad App 30
Appendix **31**
ECP Passthru 31
DSC Passthru 31
False Alarm Reduction 31
Diagnostics Function 32
Using the 984 Command Function 33
CELL 33
Using the Walk Test 33
Walk Test 33
Trip Counter for Walk Test (STD) 33
Test End Warning 33
Failed Zones Display 33
Cross Zoning 33
Arming/Disarming Ademco Vista Panels 34
FCC NOTICE **37**
Industry Canada **37**
NFPA 72 ..... **37**

ABOUT THE COMMUNICATOR

The CellCom Series Universal Alarm Communicator provides a fully supervised alarm communication path for any burglary, commercial fire, or residential fire control panel. The CellCom Series can be connected to any control panel's dialer output and used to capture Contact ID messages based on SIA DC-05-1999.09-DCS. The communicator also provides four input zones and two open-collector outputs for connection to burglary, commercial fire, or residential fire control panel outputs and zones. Zone 4 allows a connection to the bell output of an existing control panel.

The communicator operates in a variety of applications: Dialer Connection, Zones 1-4 Input Connections, or Zone 4 Bell Connection. See "Applications".

The CellComF Series Fire Alarm Communicator includes a red enclosure and a Model 685-R (Red) Backbox.

Features

- Can be powered from 12 VDC or 24 VDC
- Zone 1-4 terminals with 12 V and 24 V power input
- Tip & Ring terminal (CellCom Series); Two Tip & Ring terminals (CellComF Series)
- Programming header for connecting to a programming keypad
- LED to indicate armed state and power conditions

What is Included

- PCB with enclosure
- Model 685-R Back Box (CellComF Series modules only)
- Hardware pack
- External antenna

SYSTEM COMPONENTS

Terminals

Power Connection Terminals

The communicator may be powered from the 12 VDC or 24 VDC auxiliary output of the control panel. Observe polarity and use 18-22 AWG wire to connect the communicator terminal +12 to the +12 or +24 V positive terminal on the control panel auxiliary output. See Figure 1. Connect the communicator terminal G (ground) to the negative terminal on the control panel auxiliary output.

Control Panel Standby Power

During a power outage, the communicator draws power from the control panel's backup battery. The communicator must be included in the standby battery calculations for the control panel.

Zones 1-4

Terminals Z1 to Z3, G (ground), Z4+ and Z4- provide four zones to connect to individual relay outputs on the control panel. Zone 4 (Z4+ and Z4-) can be connected to the control panel bell output. See Zone 4 Bell Connection.

Open-Collector Outputs

Terminals O1 and O2 can be programmed to indicate the activity of the zones or conditions occurring on the system. Open-Collector outputs do not provide a voltage but instead switch-to-ground the voltage from another source. Maximum voltage is 30 VDC at 50 mA. The outputs can respond to any of the conditions listed below:

- Activation by zone condition: Steady, Pulse, Momentary, or Follow
- Communication
- Armed area annunciation
- Remote Arming Output

Dialer Connection

Directly connect the Telco phone line (tip and ring) from the control panel to the terminal R (Ring) and one into terminal T (Tip). For more information, refer to "CID, SIA, and 4-2 Dialer Connection".

Programming (PROG) Connection

A 4-pin programming header is provided to connect a keypad when using a DMP Model 330 programming cable. This provides a quick and easy connection for programming the communicator. For 24 VDC applications using the communicator, connect the keypad using a Model 330-24 4-wire programming harness with an in-line resistor. After programming is complete, remove the keypad.

Caution: If connecting to a 24 VDC control panel, do not connect a keypad using a Model 330 harness.

Tamper

The tamper is pressed when the cover of the communicator is secured onto the enclosure. When the cover is removed, the communicator sends a tamper trouble message to the central station.

Reset Button

The reset button is located on the upper right side of the circuit board and is used to reset the communicator. After resetting the communicator, begin programming within 30 minutes. If you wait longer than 30 minutes, reset the communicator again.

Note: After the panel is reset, cell suppression is disabled for 30 minutes.

Load Button

Firmware can be updated with the programming header. Firmware updates are available for download, free of charge, on the DMP Dealer Direct website at DMP.com/Dealer_Direct.

Caution: Do not connect a Model 401 to the communicator if using 24 V power.

Performing a Firmware Update

To update the communicator with a new firmware version, complete the following steps at the protected premise:

399 Programming Cable

1. Connect a DMP 399 Cable from the programming header to the serial port of your PC operating Remote Link and containing the communicator RU file.
2. Start Remote Link and create or open the account that matches the communicator to be updated.
3. Set the connection information type to direct with a baud rate of **38400** and choose the appropriate COM port.
4. Select **Panel > Remote Update**, then select the correct RU file for the communicator.
5. Press and hold the load button, then press and release the reset button.
6. Release the load button and select **<Update>** in Remote Link.
7. After the firmware update is completed, remove the 399 cable and press the reset button to resume normal operation.

Model 401 USB Flash Module

When loading the firmware RU file onto a USB drive, place the file in the root directory of the USB drive. The update cannot be inside a folder. Format the USB drive as FAT32.

Place only one firmware file in the root directory. If more than one RU file exists on the USB drive, the communicator will choose the RU file with the most recent date modified.

Caution: DualCom, CellCom, iCom, and XTL+ do not use the same RU files. Using the wrong RU file for the update will cause the communicator to stop working until the correct RU file is used to flash the firmware.

1. Connect the USB flash drive to the Model 401.
2. Press and hold the reset button on the communicator. You will continue to hold reset until step 6.
3. Connect the assembly to the communicator's programming header.
4. Press and release the button on the Model 401.
5. With your finger still on RESET, press and hold the load button. Continue to hold LOAD until step 8.
6. Release the reset button.
7. Press and release the button on the Model 401.
8. When the green LED on the Model 401 starts a slow flash, release the load button. The slow flash will last 5 minutes, then the green LED will become steady, indicating the firmware version is updated.

   Note: If the LED blinks rapidly, the update was unsuccessful. Press and release RESET. Begin again at step 1

9. Press and hold RESET. Remove the Model 401, then release RESET to resume normal operation.

In the event the Model 401 USB Flash Module is inadvertently removed from the communicator before the update finishes, repeat steps 1-9.

Backlit Logo

The backlit logo indicates the power and armed status of the communicator. Depending on the operation, the LED displays in red or green as listed in the Table 1. The LED indicates the armed state and status of the system primary power.

COLOR AND ACTIVITY	OPERATION
Green Steady	Communicator Disarmed, Primary Power OK
No Light	No Power
Red Steady	Communicator Armed, Primary Power OK

Table 1: LED Status

ECP and DSC Passthru

Perform an ECP or DSC Passthru and communicate through the communicator over the host panel's bus. This also allows users to manage host panels through Virtual Keypad including arming, disarming, viewing zone status, bypassing zones, view history, manage users, and more.

Note: Programming a DSC panel remotely requires a Model 330-DSC Programming Harness (sold separately).

INSTALLATION

Select a Location

Install the communicator away from metal objects. Do not mount the communicator inside or on a control panel metal enclosure. Mounting the communicator on or near metal surfaces impairs cellular performance.

Mount the Communicator

The communicator should be mounted to a wall using the included #6 screws in the mounting holes. See Figure 1. Mount the communicator in a secure, dry place to protect the communicator from damage due to tampering or the elements. It is not necessary to remove the PCB when installing the communicator.

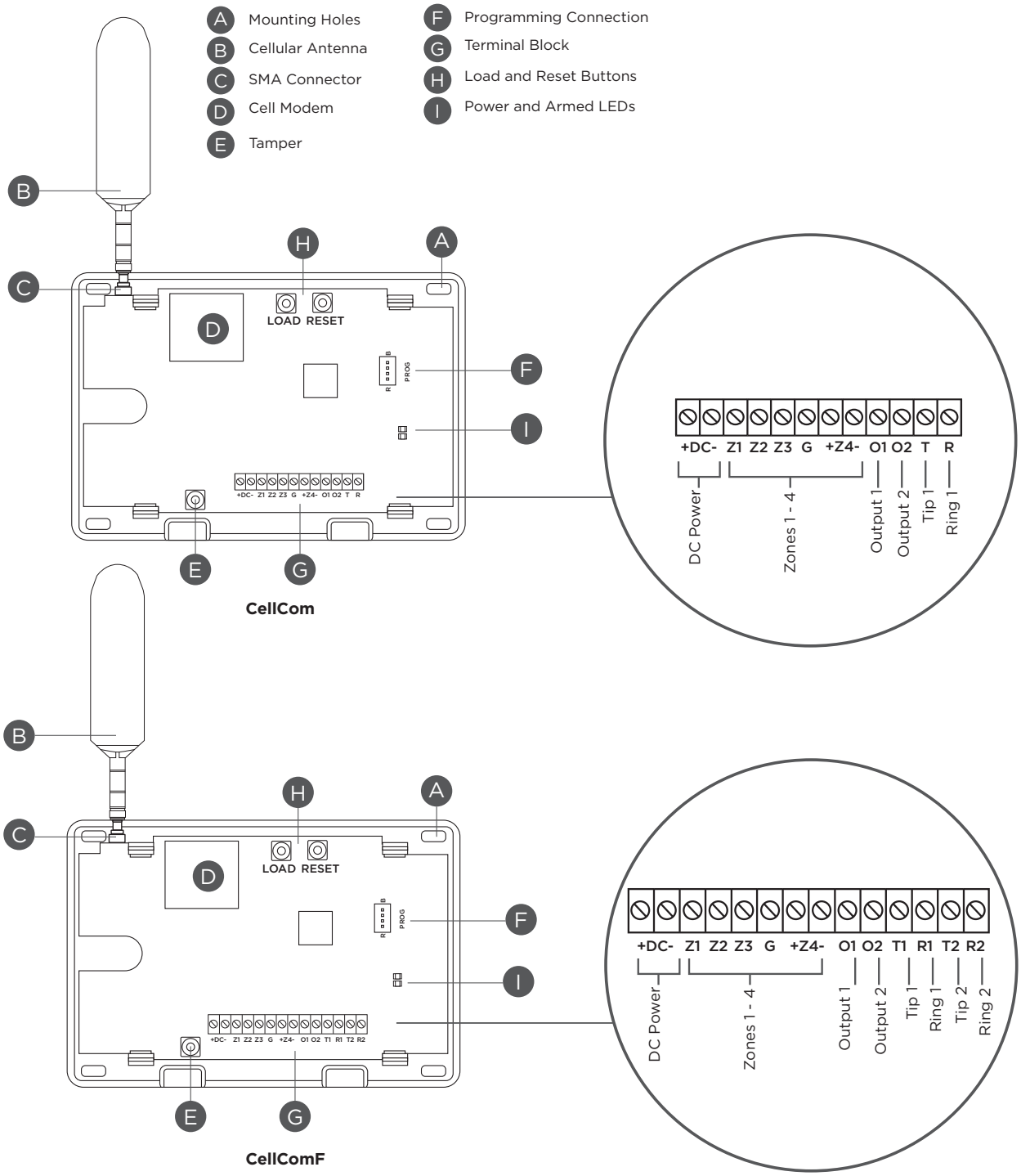

Figure 1: System Components

Wire the Communicator

When connecting component wires, route all wires so they will not interfere with the tamper switch. See Figure 2 and Figure 3 for wire routing options.

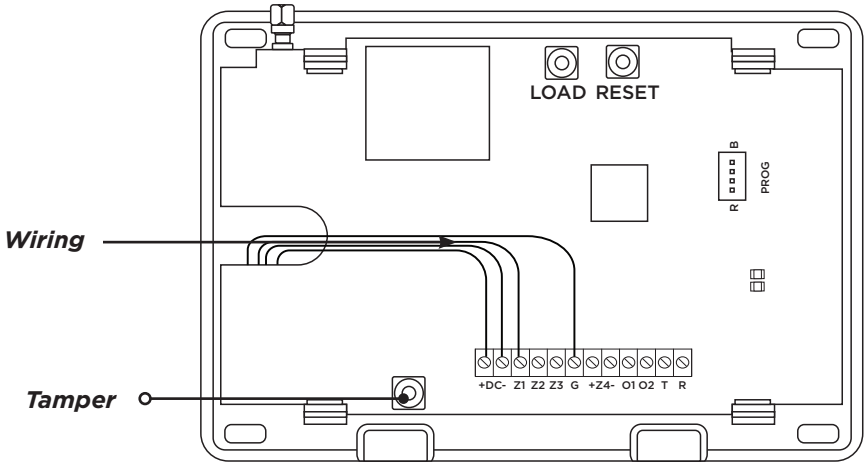

Figure 2: Wire Routing Option One

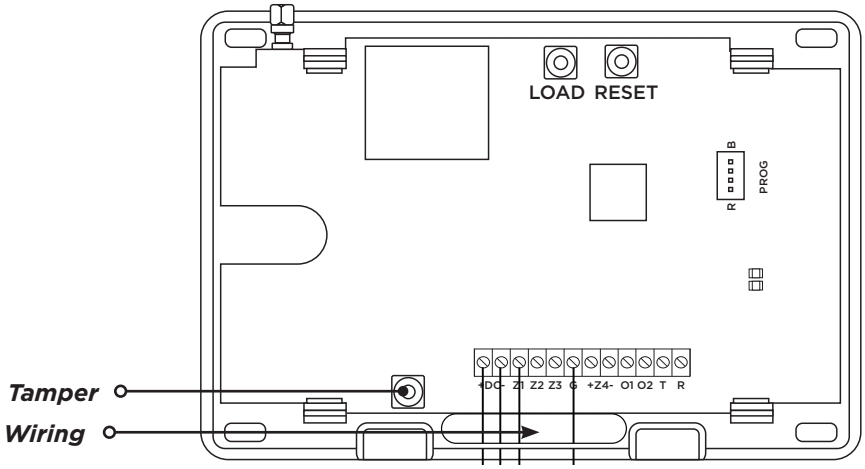

Figure 3: Wire Routing Option Two

Connect the Antenna

Place the antenna onto the SMA connector. Refer back to Figure 1. Twist the antenna until it is securely tightened.

Replace the housing cover on the mounted base. Be sure to not damage any PCB components when removing or replacing the housing cover.

APPLICATIONS

The communicator can be used in a variety of applications.

CID and 4-2 Dialer Connection

Directly connect one or both tip and ring terminals from the control panel to the communicator. See Figure 4. This connection captures Contact ID messages from any fire panel that are based on the SIA communication standard DC-05-1999.09-DCS. 4-2 format is compatible with 4-2 pulse. SIA format is compatible with DC-03-2017 | DCS SIA Format Standard. Messages are then formatted into a Serial 3 message and sent to an SCS-1R Receiver or SCS-VR Receiver.

Note: Dialer Connection cannot be used when using Zone 4 Bell Connection. Do not connect telephone company wires to the communicator. Remove any connected telephone company wires from the control panel.

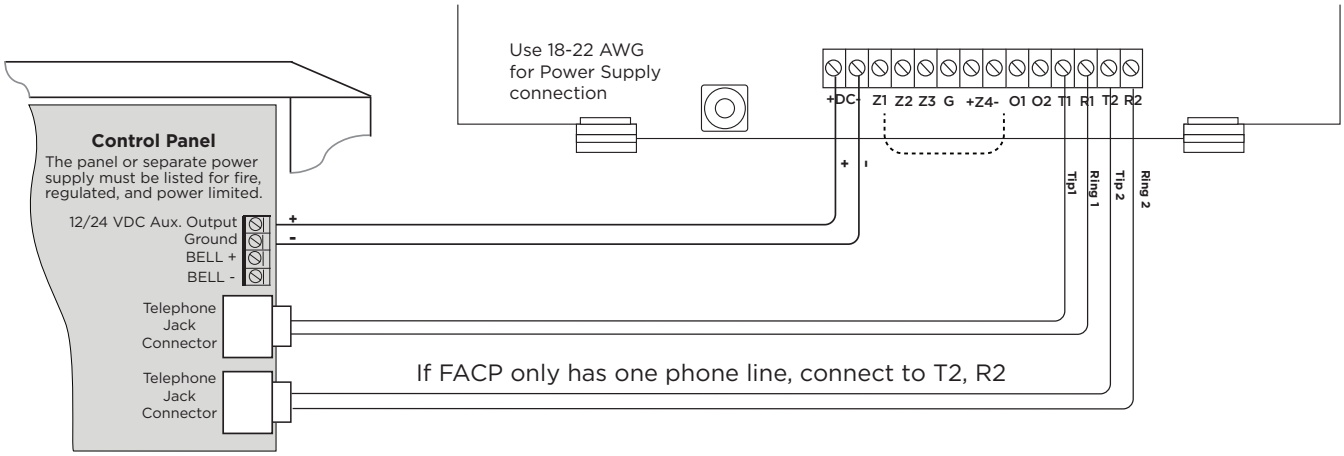

Figure 4: Wiring Diagram for Tip and Ring Connection

Communication Failure (CellComF Series only)

The phone line voltage on the second tip and ring will drop when the CellComF Series is in a communication failure state. This triggers the host panel to annunciate a communication failure. When communication is restored, voltage is restored on the second tip and ring terminal and the host panel sees a restoral on the phone line.

Zones 1-4 Input Connection

Connect each control panel relay output to a zone on the communicator. For programming purposes, the zone numbers are 1-4. The following are examples of how you might use this application for a burglary or fire alarm.

Burglary

Use a normally closed output on a burglary control panel to indicate a burglary alarm. The communicator zone should be programmed with a zone name and burglary zone type. When the output on the control panel turns on and trips the communicator zone, a message is sent to an SCS-1R or SCS-VR receiver at the central station. The zone name programming can be used to describe which control panel zone indicated a burglary. See Figure 5.

Note: Zone 4 can only be used as a standard input zone when not programmed as zone type Auxiliary 2 (A2). See Zone 4 Bell Connection.

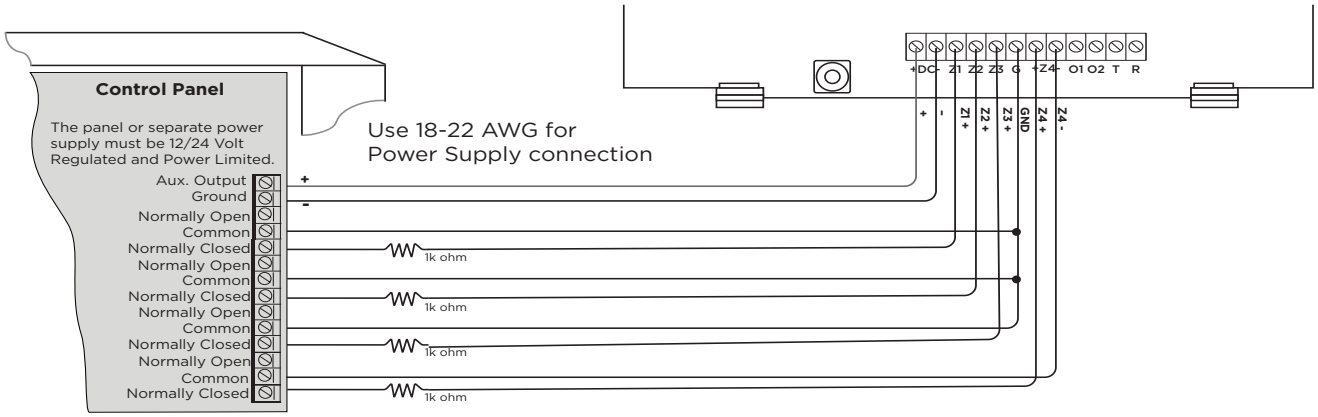

Figure 5: Wiring Diagram for Burglary Zones 1-4

Zone 4 Bell Connection

Zone 4 (Z4+ and Z4-) can be connected to the control panel bell output. This zone detects an alarm condition on the control panel by monitoring the voltage and cadence timing of the bell output. The communicator evaluates the first 3.5 seconds of bell cadence timing to detect the type of alarm sent. See Figure 6.

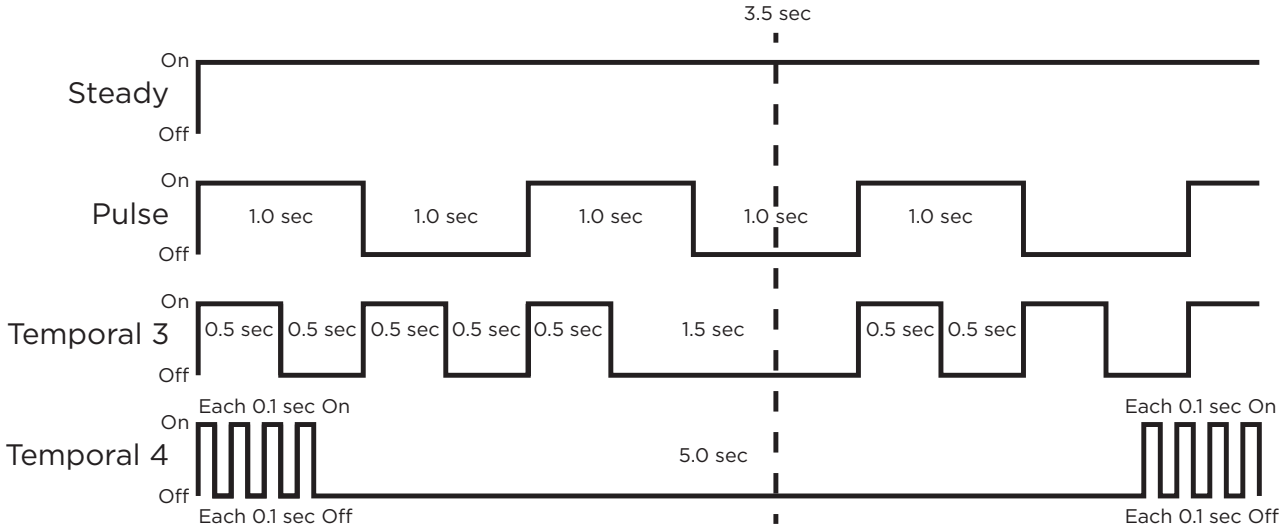

Figure 6: Zone 4 Bell Cadence Information

To enable alarm detection operation, Zone 4 Bell Connection must be programmed as Zone Type (A2) in Zone Information programming. See Table 2 for bell cadence type, zone number, and type of message sent to the receiver.

The communicator generates zones 5 and 6 using the zone name of zone 4 to send to the central station. Zones 5 and 6 cannot be preprogrammed in Zone Information. Dialer Connection cannot be used when using Zone 4 Bell Connection.

BELL CADENCE	ZONE NUMBER	TYPE OF MESSAGE
Steady	Zone 4	Burglary
Pulse or Temporal 3	Zone 5	Fire
Temporal 4	Zone 6	Emergency or Carbon Monoxide

Table 2: Message Breakdown

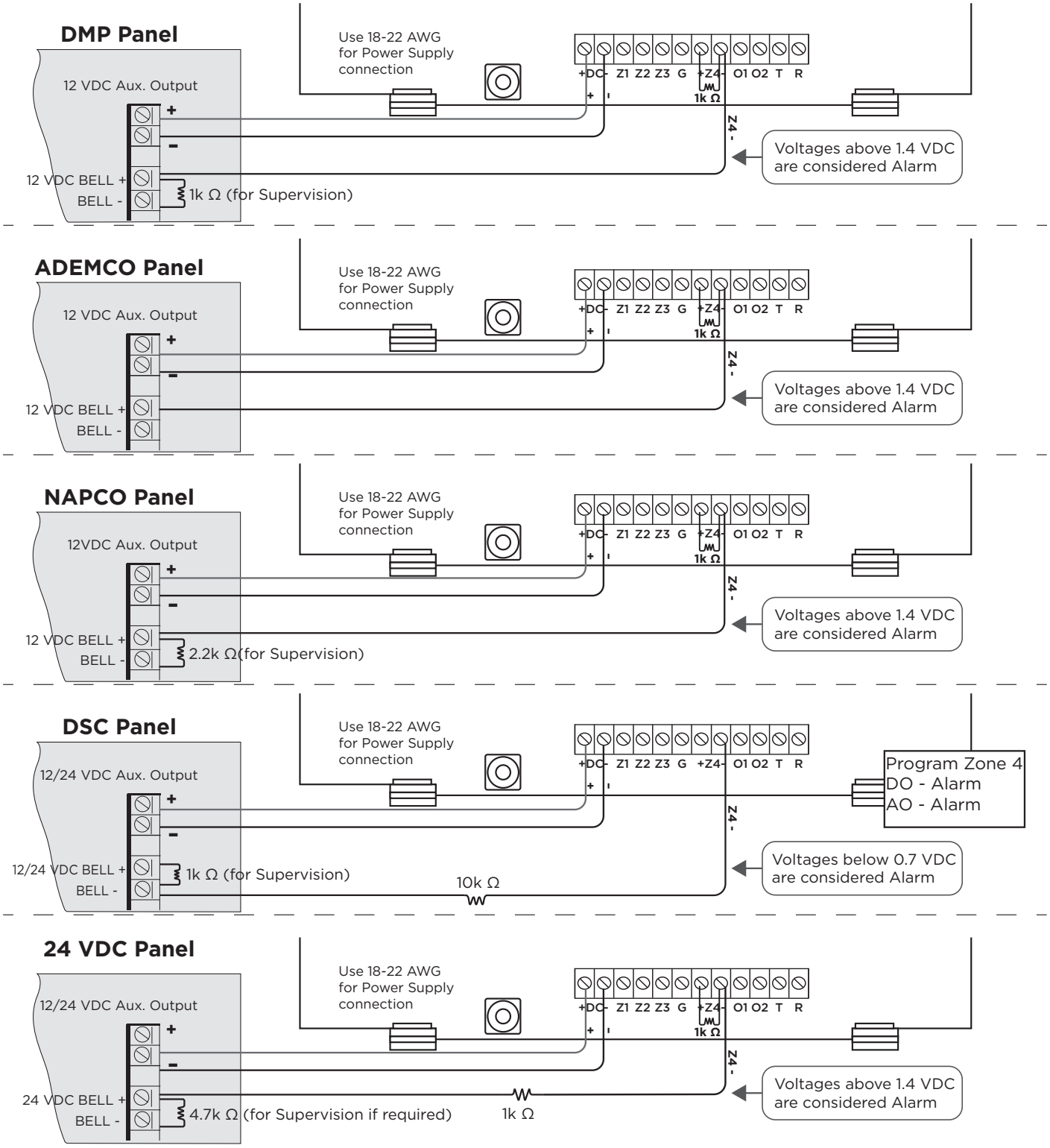

Figure 7: Zone 4 Bell Connection

Note: Voltage should be read from the Z4- terminal using the red probe of a multimeter. The black probe of the multimeter should be used to read voltage from the DC- terminal.

ECP Passthru Connection

The communicator can be connected to the ECP Bus of a compatible VISTA panel. Refer to “VISTA Panel Compatibility” for VISTA compatibility details. See Table 3 and Figure 8 for wiring details.

Configuration

To configure the communicator for ECP Passthru, set **KEYPAD INPUT** to **ECP**, program VISTA keypad device address 20, then use the **ECP SETUP** feature in the Diagnostics (**DIAG**) menu. For details, refer to “Keypad Input” and “ECP Setup”.

For more information about configuring ECP Passthru, refer to COM Series How-To Guide: ECP Passthru (LT-2209).

COMMUNICATOR TO ECP WIRING	
Communicator Terminal	VISTA Terminal
+DC	Keypad Power
-DC	Keypad GND
Z4+	Data Out
Z4-	Data In

Table 3: ECP Terminal Connections

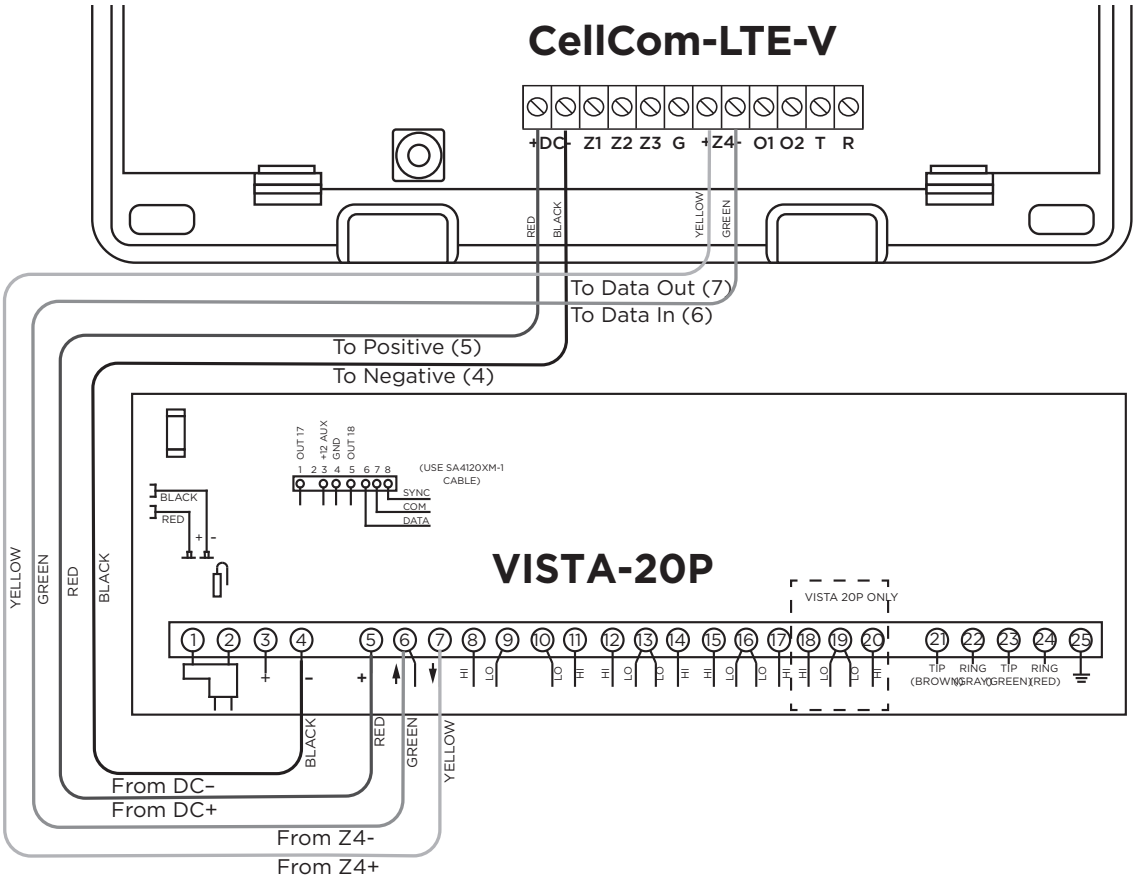

Figure 8: ECP Passthru Wiring

VISTA Panel Compatibility

Panel Type	ECP	Remote User Management	Remote Arming/ Disarming	Remote Zone Status	Compatible with Compass
VISTA-10SE	Rev 15 or higher	No	No	No	No
VISTA-10P	Yes	Yes	Yes	Yes	Firmware version 2.0 or higher
VISTA-15	Yes	No	No	No	No
VISTA-15P	Yes	Yes	Yes	Yes	Firmware version 5.2 or higher
VISTA-20SE	Rev 12 or higher	No	No	No	No
VISTA-20P	Yes	Yes	Yes	Yes	Firmware version 5.2 or higher
VISTA-20PI	Yes	Yes	Yes	Yes	Firmware version 5.0 or higher
VISTA-21iP	Yes	Yes	Yes	Yes	Yes
VISTA-21iPLTE	Yes	Yes	Yes	Yes	Yes

Note: Panels must be programed in the Stay/Away mode for Remote Arming/Disarming (No Partitions). Vista 32, 40, 50, 128, 250 are not compatable with ECP Virtual Keypad.

DSC Passthru Connection

The communicator can be connected to the DSC Bus of a DSC PowerSeries Model PC1616, PC1832, or PC1864. Refer to Table 4 and Figure 9 for wiring details.

Configuration

To configure the communicator for DSC Passthru, set **KEYPAD INPUT** to **DSC** in **System Options** and then use the **DSC SETUP** feature in the Diagnostics (**DIAG**) menu. For details, refer to “Keypad Input” and “DSC Setup”.

For more about configuring DSC Passthru systems, refer to COM Series How-To Guide: DSC Passthru (LT-2208).

COMMUNICATOR TO DSC WIRING	
Communicator Terminal	DSC Terminal
DC+	RED
DC-	BLK
Z4+	YEL
Z4-	GRN
T or T1	TIP
R or R1	RING
N/A	Bell+ to Bell- (1k Ω EOL)
N/A	Zones 1 - 8 (5.6k Ω EOL)
PROG	PC Link (COM) Tab Up

Table 4: DSC Terminal Connections

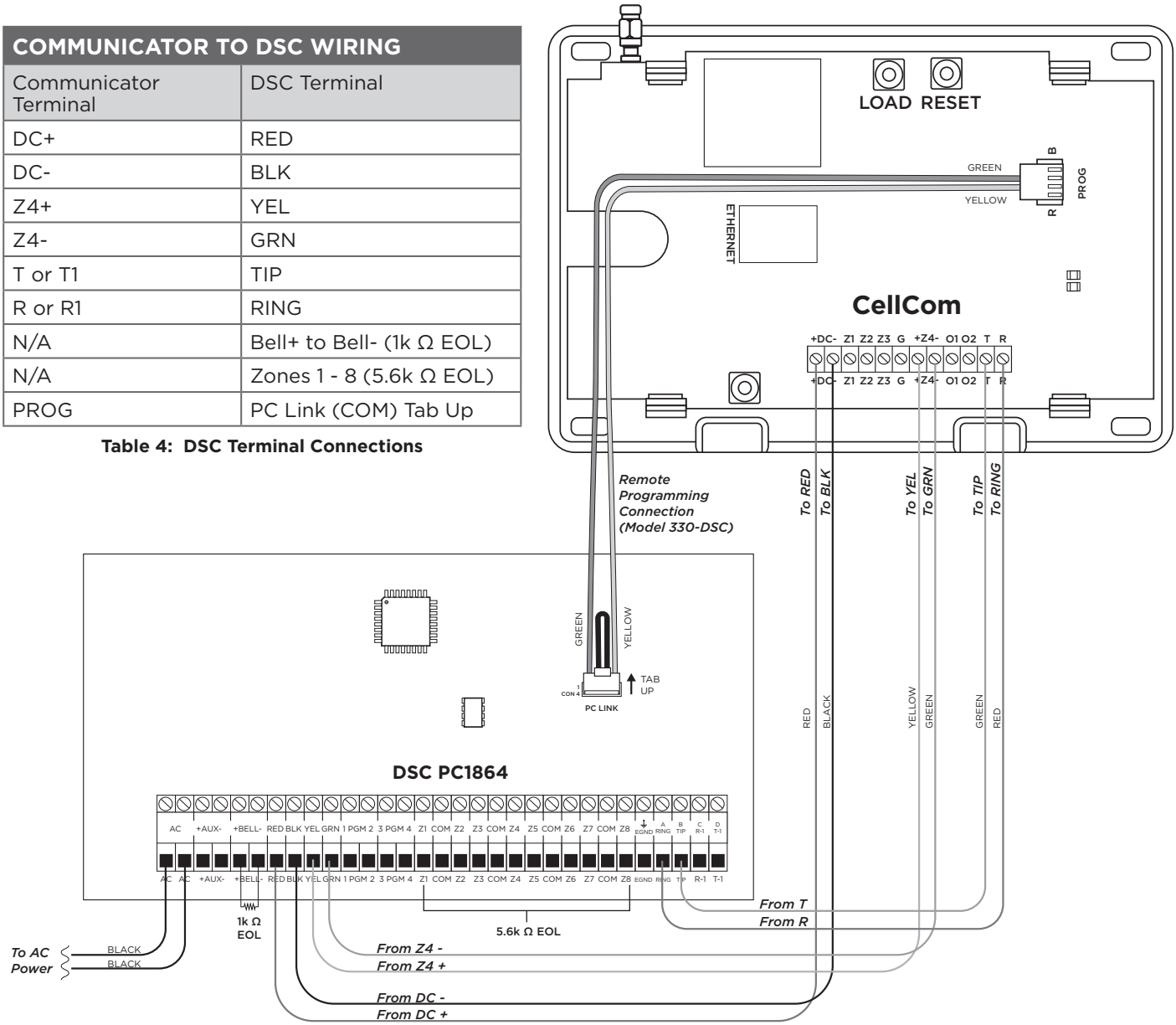

Figure 9: DSC Passthru Wiring

ADDITIONAL APPLICATIONS

Use Outputs

A burglary control panel zone may be programmed as an arming zone and connected to output O1 or O2. See Figure 11. Program the output number in armed output or remote arming output in output options when programming the communicator. See Armed Output or Remote Arming Output. The communicator output connections can be used with any of the applications listed in this guide. See Applications.

Communicator to Panel Burglary Zones

1. Connect the communicator's **Z1** (zone 1) terminal to the control panel's armed output terminal.
2. Connect the communicator's **O1** (output 1) terminal to the control panel's keyswitch or arming zone.

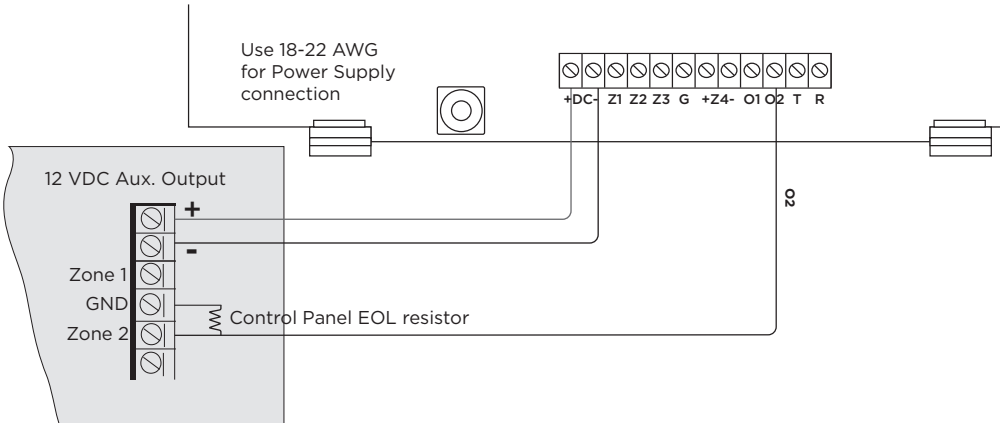

Figure 11: Communicator to Burglary Control Panel Zones

Honeywell Vista 20 Panel Wiring

1. Connect the communicator's **Z1** (zone 1) terminal to output **17** on the control panel.
2. Connect the communicator's **O1** (output 1) terminal to the control panel's keyswitch or arming zone.
3. Connect the **T** (tip) terminal on the communicator to terminal **23** on the control panel.
4. Connect the **R** (ring) terminal on the communicator to terminal **24** on the control panel.
5. Power the communicator by connecting its terminal **+12V** to terminal **5** on the control panel.
6. Connect the communicator's **GND** (ground) terminal to terminal **4** on the control panel.

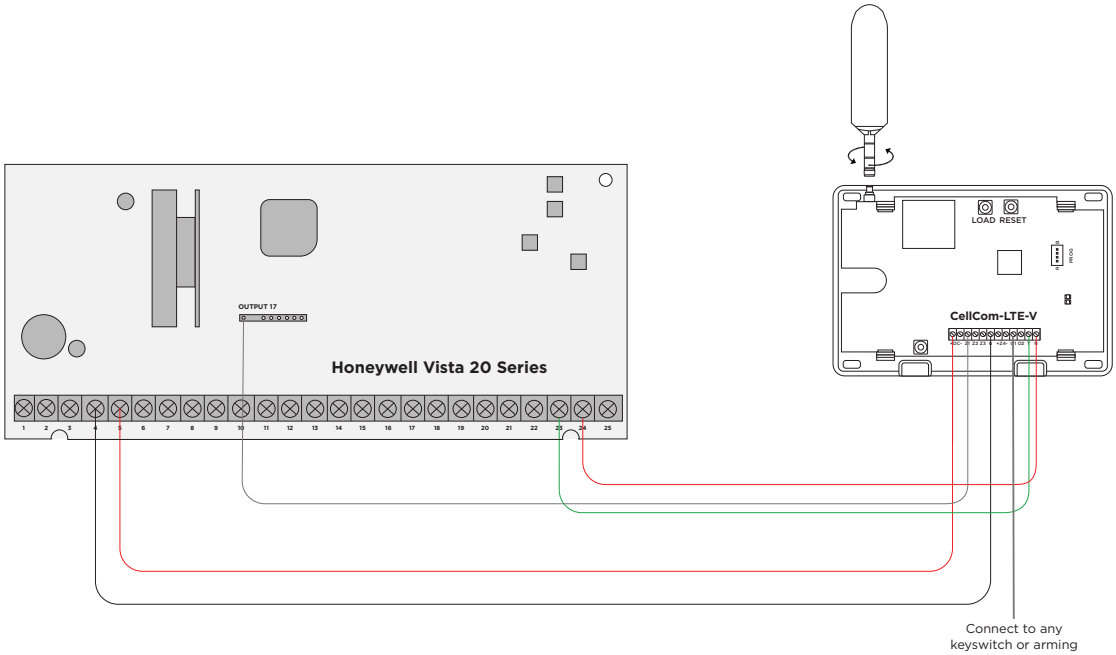

Figure 10: Vista 20 Series Control Panel to CellCom

ACTIVATE THE CELLULAR MODULE

For more information about using Dealer Admin or Remote Link, refer to DMP.com/resources/help-files.

Dealer Admin Activation

1. Navigate to the Dealer Admin site (dealer.securecomwireless.com).
2. Go to **Customers** and select the customer name.
3. In **Systems**, select the Add icon.
4. Enter the system name.
5. In **System Type**, select **CellComSL.**
6. In **Connection Type**, select **Cellular** or **EASYconnect + Cell Backup**.
7. In **SIM Number**, enter the SIM number and select **Get Status**.

Note: To activate DualSIM, select the checkbox next to **Use DualSIM**. Enter the two requested SIM numbers and select **Get Status.**

8. Select **Activate**.
9. In **Account Number**, enter the system's receiver number followed by the account number.
10. Select a **Rate Plan** for the communicator.
11. Enter the panel **Serial Number**.
12. To confirm proper communication, select **Test Connection**.
13. A dialog box displays to ask if you want to perform the initial connection to the panel. Select **Yes**.
14. Configure additional options as needed, then press **Save** at the top of the page.

Remote Link Activation

1. Go to **File > Panel Information**.
2. Press **New**.
3. In **Model**, select **CellCom.**
4. If necessary, enter a firmware version number in **Version**.
5. Enter the receiver number and account number, then press **OK**.
6. In **Connection Information**, select **Cellular**.
7. Enter the panel **Remote Key**.
8. Enter the cellular **Phone Number**.
9. Press **OK**.
10. Go to **Program > Communications**.
11. In **Connection**, press **Activate**.
12. Select **SIM** as the **SIM Type**.
13. Enter the SIM number, then select a **Rate Plan**.
14. Press **Activate**.

PROGRAMMING

Before You Begin

Read this guide before you begin programming. This guide allows you to quickly learn the programming options and operational capabilities of the CellCom Series communicator. The communicator contains all of its programming information in an on-board processor and does not require an external programmer.

In addition to this manual, you should also be familiar with the following document:

- CellCom Series Universal Alarm Communicator User Sheet (LT-1819)
- CellCom Series Universal Alarm Communicator Programming Sheet (LT-1818)

Programming Sheet

Fill out the programming sheet included with this device before you begin programming. The programming sheet lists the various options available for programming the communicator and allows you to keep a record of what options you intend to enter, reducing programming errors.

Default Master Code

Universal Communicators Version 194 and higher ship with a unique four-digit default master code. This master code is generated with an algorithm that ensures it cannot be duplicated. The code can be modified or deleted in panel programming. To revert the default code to 99, use the Clear All Codes option found in the Initialization menu. Panels ship with the master code on the serial number label next to the serial number.

Getting Started

Initializing the Communicator

When programming a communicator for the first time or rewriting the entire program of an existing communicator, use the initialization programming option. See Initialization. Initializing clears the communicator's memory and sets the highest user number to user code 99.

Accessing the Programmer

To access the programmer function of the communicator:

1. Connect the keypad to the programming header.
2. Press and release the reset button.
3. Enter **6653** (PROG). The keypad displays **PROGRAMMER**.

Programming Menu

The following is a list of programming menu options available in the programming menu. Press **CMD** to advance through the programming menu options. To select a menu option, press any select area when the desired menu option displays on the keypad. Use this list to navigate to your desired programming menu option in this guide.

- Initialization
- Communication
- Remote Options
- System Reports
- System Options
- Output Options
- Area Information
- Zone Information
- Stop
- Set Lockout Code

Reset Timeout

You must enter the programmer menu within 30 minutes of resetting the communicator to avoid reset timeout. After 30 minutes, if you attempt to program by entering the **6653** (PROG) code, the keypad displays **RESET PANEL**. You must reset the communicator and enter the program code within the next 30 minutes.

If you are already in the programmer menu and do not press any keys on the keypad for 30 minutes, the communicator exits programming. All data entered up to that point is saved in the communicator memory.

To exit the programmer menu, use the stop option. The stop option is the second-to-last option in programming and disarms all areas. The programming session is terminated and the keypad returns to status list or main screen.

Special Keys

The following keys and areas are common to all DMP LCD and graphic touchscreen keypads.

CMD

Command

Press **CMD** to advance through the programmer menu and through each step of a programming section. As you advance through the programmer menu, the keypad display any current programming already stored in the communicator memory. If no change is required for an option, press **CMD** to advance to the next step.

CMD is also used to enter information into the communicator's memory such as an IP address or a zone name. Press **CMD** after entering information.

←

Back Arrow

Use the back arrow to back up one step in a programming menu or to erase a typing error while entering information.

Select Areas

The top row of keys on LCD Keypads are called select areas. The select areas on graphic touchscreen keypads are along the top of the keypad. When you need to press a select area, the keypad displays the options.

When there are more than four response options available, press **CMD** to display the next set of options. Press the back arrow to return to the previous options.

LCD Keypads

The first select area is on the far left. The second select area is second from the left. The third select area is second from the right. The fourth select area is on the far right and is for special characters. See Figure 13.

Graphic Touchscreen Keypads

When instructed to press the first select area, touch select area 1; the second select area, touch select area 2; third select area, touch select area 3; and the fourth select area, touch select area 4. See Figure 14.

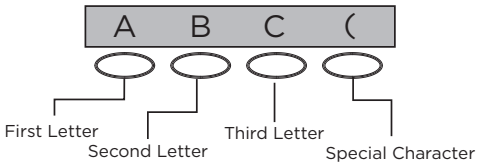

Figure 12: LCD Keypad Select Keys

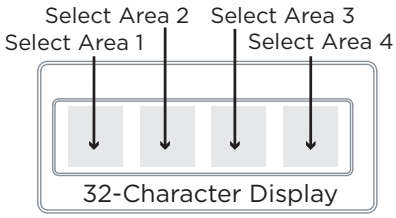

Figure 13: Graphic Touchscreen Keypad Select Areas

Letters and Special Characters

Use the number pad directions below to enter letters and special characters on a number pad or use the standard keyboard directions to enter letters and special characters on a standard keyboard.

Number Pad

1. Choose a character from Table 5.
2. Identify the number the character correlates with and press that number on the number pad.
3. Identify the select area for that character and press that select area on the keypad. To access the lowercase letter, press that select area again.
4. When the desired character displays on the keypad, return to step 1 to enter another character or press **CMD** if finished.

NUMBER	SELECT KEY 1	SELECT KEY 2	SELECT KEY 3	SELECT KEY 4
1	A	B	C	(
2	D	E	F	)
3	G	H	I	!
4	J	K	L	?
5	M	N	O	/
6	P	Q	R	&
7	S	T	U	@
8	V	W	X	,
9	Y	Z	space	_
0	-	.	*	#

Table 5: Entering Letters and Special Characters in the Number Pad

Standard Keyboard

- Press ABC to access uppercase letters.
- Press abc to access lowercase letters.
- Press !@# to access symbols and special characters.
- Press 123 to access the number pad.

Note: Not all keypad prompts accept letters and/or symbols. For example, pressing **P** on the **ENTER CODE** prompt could display a 6 on the keypad.

Current Programming

Each programming option that displays shows the information already programmed in the communicator memory. To change the already programmed information, simply replace the information. To change a programming option that requires a **YES** or **NO** response, press the select area for the desired response.

INITIALIZATION

INITIALIZATION

This option allows you to set the communicator's programmed memory back to the factory defaults in preparation for system programming.

After selecting **YES** to clear a section of memory, the communicator asks if you are sure you want to clear the memory. This is a safeguard against accidently erasing part of your programming. No memory is cleared from the programming until you answer **YES** to the confirmation prompt. See Figure 15.

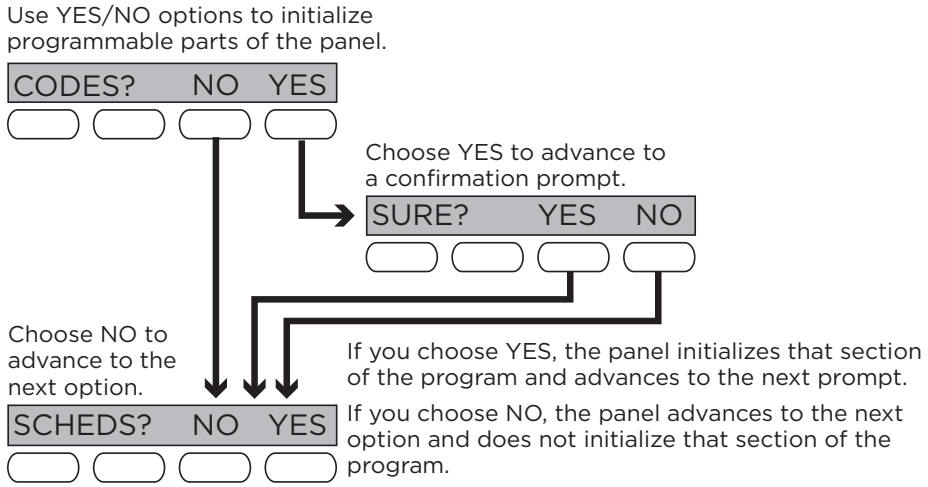

Figure 14: Alternating Yes and No Options

CODES? **NO** YES
SURE? YES NO

CLEAR ALL CODES

Choose **NO** to leave existing codes intact.

Choose **YES** to clear the user code memory and assign user code number 99 to user 20.

SCHEDS? **NO** YES
SURE? YES NO

CLEAR ALL SCHEDULES

Choose **NO** to leaves existing schedules intact.

Choose **YES** to clears all schedules from the programming.

EVENTS? **NO** YES
SURE? YES NO

CLEAR EVENTS

Choose **NO** to leave existing event memory intact.

Choose **YES** to clear all event memory in the display events buffer.

ZONES? **NO** YES
SURE? YES NO

CLEAR ZONE PROGRAMMING

Choose **NO** to leave existing zone information intact.

Choose **YES** to set all zones in the system to *__UNUSED__*.

COMMS? **NO** YES
SURE? YES NO

CLEAR COMMUNICATION

Choose **NO** to leave existing communication programming intact.

Choose **YES** to clear communication to factory defaults.

DEFAULTS?**NO** YES
SURE? YES NO

SET TO FACTORY DEFAULTS

Choose **NO** to leave the remainder of the existing communicator programming intact.

Choose **YES** to set the communicator programming back to factory default selections.

Note: Choosing **YES** does not clear the event memory, zone, user code information, or schedules.

COMMUNICATION

COMMUNICATION

This option allows you to configure the communication settings for the communicator.

ACCOUNT NO:

ACCOUNT NUMBER

Enter the account number sent to the receiver. The range is 1-65535. For account numbers of four digits or less, do not enter leading zeros.

XMIT DELAY: **0**

TRANSMISSION DELAY

Enter the number of seconds the communicator waits before sending burglary alarm reports to the receiver. The range is 15-45 seconds. The default is **0**. Enter **0** to disable this function.

COMM TYPE: CELL

COMMUNICATION TYPE

The communicator uses **CELL** communication to DMP Model SCS-1R or SCS-VR Receivers.

TEST TIME
00:00 AM

TEST TIME

Enter the time of day the communicator should send the test report to the SCS-1R or SCS-VR receivers. Use entries between 12:00 to 11:59 and then choose **AM** or **PM**. To enable daily tests from the host panel, leave the time blank and enable test reports for receiver 1 and/or for receiver 2. See Test Report.

CELL TST DAYS: **1**

CELL TEST DAYS

If you entered a test time, you can enter how often the panel test report is sent to the receiver. The range is 1 to 60 and the default is **1**. Enter **0** to disable the test report.

CHECKIN: **0**

CHECK-IN MINUTES

Check-in reports are a method of supervising the panel for communication with the receiver. Enter the number of minutes between check-in reports. The range is 3-240 minutes. The default is **0**. Enter **0** to disable check-in minutes.

Note: Additional cell charges may apply if this option is used.

FAIL TIME: **0**

FAIL TIME MINUTES

Fail time allows the SCS-1R or SCS-VR receivers to miss a defined number of check-ins before logging that the panel is missing. For example, if cell check-in is 20 minutes and fail time is 30 minutes, the receiver only indicates a Panel Not Responding after 30 minutes. The fail time must be equal to or greater than the cell check-in minutes. If cell check-in is 20 minutes, the fail time must be 20 minutes or more. The range is 3-240 minutes. The default is **0**.

RECEIVER 1 PROG

RECEIVER 1 PROGRAMMING

This option allows you to set the options for the first receiver the communicator attempts to contact when sending reports from the host panel and/or communicator. The communicator supports communication up to two receivers.

ALARM NO **YES**

Alarm Reports

Choose **YES** to enable Abort, Alarm, Alarm Restoral, Alarm Bell Silenced, Ambush, Exit Error, and System Recently Armed reports to be sent to this receiver. The default is **YES**.

Choose **NO** to disable sending these reports to the receiver.

SPV/TRBL NO **YES**

Supervisory/Trouble Reports

Choose **YES** to enable Supervisory, Trouble, Trouble Restoral, Force Armed, and Fault reports to be sent to this receiver. The default is **YES**.

Choose **NO** to disable sending these reports to the receiver.

O/C USER NO **YES**

Opening/Closing and User Reports

Choose **YES** to enable Opening/Closing, Schedule and Code Changes, and Bypass reports by user to be sent to this receiver. The default is **YES**.

Choose **NO** to disable sending these reports to the receiver.

TEST RPT NO **YES**

Test Report
Choose **NO** to disable sending these reports to the receiver.

FIRST IP ADDR
000.000.000.000

First IP Address
Enter the first (primary) IP address where the communicator sends messages. Enter all 12 digits and leave out the periods. For example, enter IP address 192.168.0.250 as 192168000250. The periods display automatically.

FIRST IP PORT
2001

First IP Port
Enter the first IP port number to be used with the first IP address. The IP port identifies the port used to communicate messages with the communicator. The default IP port setting is **2001**.

SECOND IP ADDR
000.000.000.000

Second IP Address
Enter the second IP address where the communicator sends messages. Enter all 12 digits and leave out the periods. The periods display automatically.

SECOND IP PORT
2001

Second IP Port
Enter the second IP port number to be used with the second IP address. The IP port identifies the port used to communicate messages to and from the communicator. The default IP Port setting is **2001**.

RECEIVER 2 PROG

RECEIVER 2 PROGRAMMING

Set the options for the second receiver that the communicator attempts to contact when sending reports from the host panel or communicator. The communicator supports communication with up to two receivers.

Note: If you select **YES** for any of the receiver 2 options, you must have at least one IP address programmed in receiver 2 programming. The receiver 2 defaults are set to **NO**.

ALARM **NO** YES

Alarm Reports
Choose **YES** to enable Abort, Alarm, Alarm Restoral, Alarm Bell Silenced, Ambush, Exit Error, and System Recently Armed reports to be sent to this receiver.

Choose **NO** to disable sending these reports to the receiver. The default is **NO**.

SPV/TRBL **NO** YES

Supervisory/Trouble Reports
Choose **YES** to enable Supervisory, Trouble, Trouble Restoral, Force Armed, Late to Close, and Fault reports to be sent to this receiver.

Choose **NO** to disable sending these reports to the receiver. The default is **NO**.

O/C USER **NO** YES

Opening/Closing and User Reports
Choose **YES** to enable Opening/Closing, Schedule and Code Changes, and Bypass reports by user to be sent to this receiver.

Choose **NO** to disable sending these reports to the receiver. The default is **NO**.

TEST RPT **NO** YES

Test Report
Choose **YES** to enable the recall test report from the host panel and/or communicator to be sent to the receiver.
Choose **NO** to disable sending this report to the receiver. The default is **NO**.

FIRST IP ADDR
000.000.000.000

First IP Address
Enter the first (primary) IP address where the communicator sends messages. Enter all 12 digits and leave out the periods. For example, enter IP address 192.168.0.250 as 192168000250. The periods display automatically.

FIRST IP PORT
2001

First IP Port
Enter the first IP port number to be used with the first IP address. The IP port identifies the port used to communicate messages with the panel. The default IP port setting is **2001**.

SECOND IP ADDR
000.000.000.000

Second IP Address
Enter the second IP address where the communicator sends messages. Enter all 12 digits and leave out the periods. The periods display automatically.

SECOND IP PORT
2001

Second IP Port
Enter the second IP port number to be used with the second IP address. The IP port identifies the port used to communicate messages with the panel. The default port is **2001**.

REMOTE OPTIONS

REMOTE OPTIONS

This option allows you to enter the information needed for remote command/remote programming operation.

RMT KEY:

REMOTE KEY

Enter a code of up to eight digits for use in verifying the authority of a receiver to perform a remote command/programming session. The receiver must give the correct key to the communicator before access will be granted. All communicators are shipped from the factory with the remote key preset as blank.

To enter a new remote key, press any select area and enter any combination of up to 8 digits. The numbers you enter appear as asterisks.

DISARM NO **YES**

REMOTE DISARM

Choose **YES** to enable the communicator to be disarmed remotely. The default is **YES**.

Choose **NO** to disable remote disarming.

SYSTEM REPORTS

SYSTEM REPORTS

This option allows you to select which reports the communicator sends to the receiver.

O/C RPTS **NO** YES

OPENING/CLOSING REPORTS

Choose **NO** to prevent sending opening/closing reports.

Choose **YES** to send opening/closing reports for each programmed area. The default is **NO**.

RESTORAL
NO **YES** DISARM

ZONE RESTORAL REPORTS

Specify whether the communicator sends zone restoral reports and when they will be sent.

Choose **NO** to prevent sending restoral reports from the communicator.

Choose **YES** to enable the communicator to send zone restoral reports when a zone restores from an alarm or trouble condition. The default is **YES**.

Note: The communicator sends zone restoral reports when a zone that has restored from an alarm or trouble is disarmed. Twenty-four hour zones send restorals immediately.

SEND STORED
MESSAGES? **NO** YES

SEND STORED MESSAGES

If a communicator loses communication with the receiver, it will store any messages that are not able to be sent while communication was down. Selecting YES allows the communicator to send all stored messages to the receiver once communication is restored. The time at which each message was generated is also sent. Default is **NO**.

SYSTEM
INFO **NO** YES

SEND SYSTEM INFORMATION

If **YES** is selected, the panel family and panel serial number appear as additional identifiers on the end of the Serial 3 message sent to the monitoring center. The addition of the panel family and panel serial number helps monitoring center operators identify the correct system if two panels unintentionally use the same account number.

If **NO** is selected, the Serial 3 message does not include the panel family or panel serial number identifiers. Default is **NO**.

Note: This feature requires a SCS-VR Virtual Receiver or an SCS-1R Network Enabled Receiver with the SCS-150 Main Processor Card at firmware Version 108 (9/23/25).

SYSTEM OPTIONS

SYSTEM OPTIONS

This option allows you to select system wide parameters used in the operation of the communicator system.

ENTRY DLY 1: **30**

ENTRY DELAY 1

Enter the entry delay time for all exit type zones programmed. When an armed exit type zone is faulted, the area must be disarmed before the entry delay expires or a fault will be detected. All burglary type zones are delayed along with the exit zone. Entry delay times range from 30-250 seconds. The default is **30** seconds.

EXIT DELAY: **60**

EXIT DELAY

Enter the exit delay time for all exit type zones. When the exit delay time starts, all activity on exit and burglary zones is ignored until the exit delay expires. During exit delay, if an exit zone trips, then restores, and trips again, the exit delay timer restarts. This restart can occur only once. Exit delay times can be from 45-250 seconds. The default is **60** seconds.

Exit Error Operation: At arming, when an entry/exit zone (**EX**) faults at the end of the exit delay, a zone alarm and an exit error are sent to the receiver.

CRS ZONE TM:
0

CROSS ZONE TIME

Enter the time allowed between zone faults. When a zone programmed for cross zoning faults, the communicator begins counting down the cross zone time entered here. If the same zone or another cross-zoned zone faults within this time, an alarm report is sent to the receiver.

If the cross zone time expires without the second zone fault, only a zone fault report from the first zone is sent to the receiver. The cross zone time can be from 4-250 seconds in one second increments. Enter **0** to disable the cross zone time feature. See Cross Zoning.

PWR FAIL HRS: **1**

POWER FAIL DELAY

Enter the time allowed for a power failure to occur before sending a report. The delay time can be from 1-9 hours. When the power is off for the programmed delay time, a power failure report is sent to the receiver. For example, if the power failure delay is set for two hours, then the power failure report will be sent between 2-3 hours. Entering **0** sends the power failure report within 15 seconds.

SWGRBYPS TRIPS: **2**

SWINGER BYPASS TRIPS

Enter the number of times (1-6) a zone can go into an alarm or trouble condition within one hour before being automatically bypassed. Bypassed zones are automatically reset when the area they are assigned to is disarmed. All 24-hour zones are reset when any area of the system is disarmed. A programming stop operation restores a bypassed zone. Entering 0 disables this function. The default is **2**.

How it works

The communicator hour timer starts at 59 minutes past the hour. If the hour timer expires before the trip counter is exceeded, the trip counter returns to 0. If the trip counter is exceeded before the hour expires, the zone is automatically bypassed by the communicator. A bypass report is sent to the receiver if bypass reports is set to **YES**.

RST SBYP **NO** YES

RESET SWINGER BYPASS

Choose **YES** to reset an automatically bypassed zone when it remains in normal condition for one hour after being bypassed. A report of the automatic reset is sent to the receiver.

Choose **NO** to disable automatic reset of a bypassed zone. The default is **NO**.

REQUEST TIME CHG
NO **SCS** SCW

TIME CHANGES

This option allows the panel to request automatic time changes from SecureCom Wireless® or the DMP SCS-1R or SCS-VR Receiver on Path 1. For the SCS receiver to send time changes, program it to send time changes and receive time change updates from the network automation computer at least every 24 hours. The default is **SCS**.

Select **NO** to not request time changes.

Select **SCS** to request time changes from the SCS-1R or SCS-VR Receiver.

Select **SCW** to request time changes from SecureCom Wireless.

DST? NO **YES**

This option only displays if you selected SCW. The default is **YES**.

Select **NO** to not observe daylight saving time.

Select **YES** to observe daylight saving time.

HRS FROM GMT: **6**

HOURS FROM GMT

When time zone is programmed **YES**, enter the number (0-23) that indicates the Greenwich Mean Time zone (GMT) where the communicator is located. The default is **6**. See Table 6 for GMT values.

GMT	CITY/TIME ZONE	GMT	CITY/TIME ZONE
0	London, Monrovia, Lisbon	12	Fiji, Marshall Island, Wellington
1	Cape Verde Island, Azores	13	New Cadelonia
2	Mid-Atlantic	14	Guam, Sydney
3	Buenos Aires, Georgetown	15	Tokyo, Seoul
4	Atlantic Time (Canada), Caracas	16	Hong Kong, Singapore
5	Eastern Time (US, Canada) Bogota	17	Bangkok, Hanoi
6	Central Time (US, Canada) Saskatchewan	18	Dhaka, Almaty
7	Mountain Time (US, Canada), Edmonton	19	Islamabad, Karachi
8	Pacific Time (US, Canada), Tijuana	20	Abu Dhabi, Kazan
9	Alaska	21	Moscow, Bagdad
10	Hawaii	22	Eastern Europe
11	Midway Island, Samoa	23	Rome, Paris, Berlin

Table 6: GMT Time Zones

HOST INPUT
NONE ECP DSC

HOST INPUT

Select **NONE** to allow zone 4 to function as normally programmed. The default is **NONE**.

Select **ECP** to enable communication between the communicator and an Ademco/Honeywell panel using the +Z4- terminals. Using the Ademco/Honeywell ECP Bus, the communicator can add, delete, and change user codes as well as arm and disarm the Ademco/Honeywell panel. The communicator will forward alarm messages from the Ademco/Honeywell panel to the central station.

Select **DSC** to enable communication between the communicator and a DSC PowerSeries panel using the Z4- terminal. Using the DSC bus, the communicator can add, delete, and change user codes as well as arm and disarm the DSC panel. The communicator will forward alarm messages from the DSC panel to the central station.

See Ademco/Honeywell ECP Connection for examples of panel wiring and necessary Ademco/Honeywell panel programming.

ECP PARTN NBR: **1**

ECP PARTITION NUMBER

This prompt only appears if ECP is selected as the Keypad input. Select the partition number based on where the communicator is located. When the host panel is armed or disarmed, only the partition in which the communicator resides will be armed or disarmed. Valid partition numbers are 1-8. Default is **1**.

HST FORMAT
CID 4-2 SIA

HOST FORMAT

Select the option the panel receives from the tip and ring connection.

Select **CID** to receive messages as DMP string with raw CID message appended. Select **4-2** to receive messages in 4-2 format. Select **SIA** to receive messages in SIA format. The default is **CID**.

CID FORMAT
DMP CID

CID FORMAT

This option displays if you selected **CID** for **Host Format**.

Select **DMP** to send CID messages as Serial 3 format. Select **CID** to send messages as DMP string with raw CID message appended. Refer to Figure 16. Default is **DMP**.

This feature requires SCS-VR Version 1.4.6 and higher or SCS-150 Version 107 and higher.

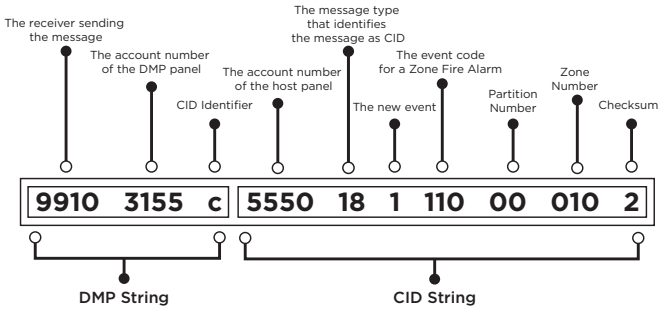

Figure 15: CID Format Option

OUTPUT OPTIONS

OUTPUT OPTIONS

This option allows you to program communicator output options. Switched ground (open collector) outputs are available using terminals O1 and O2 as the ground and your control panel for power. Select from outputs 1 or 2.

CO OUTS: - -

CUTOFF OUTPUTS

Define the operation of the two on-board outputs. For each programming option, enter the output you wish to activate or 0 for no output. Either or both of the outputs can be programmed here to turn off after the time specified in output cutoff time. To disable this option, press any select area to clear the display of output numbers and then press **CMD**.

CUTOFF TIME: 0

OUTPUT CUTOFF TIME

If a cutoff output is assigned, you can enter a cutoff time for the output to remain on up to 15 minutes. If the output is turned off manually, the cutoff time is reset. The cutoff time can be 1-15 minutes. Enter 0 to provide continuous output.

Note: The output is cutoff within 60 seconds of the programmed cutoff time.

The cutoff timer is shared by all outputs. If a second output trips, the timer is not reset. Both outputs turn off when the original time expires.

COMM FAIL OUT: 0

COMMUNICATION FAILURE OUTPUT

This output/favorite turns on when the communicator fails to communicate with the receiver. To turn off communication failure output, disarm the communicator. Enter 0 to disable this output.

ARMED OUT: 0

ARMED OUTPUT

This output/favorite turns on any time an area of the system is armed. The output turns off when the system completely disarms. Enter 0 to disable this output.

RMT ARMG OUT: 0

REMOTE ARMING OUTPUT

When the system is armed or disarmed remotely from the Virtual Keypad App, VirtualKeypad.com, Remote Link, or from a schedule, this output turns on momentary for 0.75 seconds then turns off. This output can be used for panels that require a momentary short to an arming zone to arm and a momentary short to disarm.

AREA INFORMATION

AREA INFORMATION

This option allows you to assign functions to the area of the communicator. All non-24-hour zones must be assigned to an active area. See Zone Information for more information.

AREA NO: -

AREA NUMBER

Enter the number of the area you wish to program. Select from areas 1-6.

* UNUSED *

AREA NAME

Only those areas given names can have zones assigned to them. All others are marked *__UNUSED__*. See Letters and Special Characters for more information.

To add an area name to the system, press any select area and enter up to 16 characters for the new name. Press **CMD** to continue. To mark an active area as unused, delete the old name by pressing any select key then press **CMD**. The communicator automatically sets the name as *__UNUSED__*. If you have already initialized the communicator, all areas will be marked as *__UNUSED__*.

AUTO ARM **NO** YES

AUTOMATIC ARMING

Choose **YES** to allow this area to arm automatically according to the opening and closing schedule. At arming, faulted zones are handled according to the option selected in bad zones. If a closing report is sent, the user number is indicated as **SCH** on the SCS-1R or SCS-VR receivers.

Choose **NO** to disable automatic arming for this area. The default is **NO**.

BAD ZONES: **BYP**
BYP FORC REF

Bad Zones

At the time of automatic arming, some zones in the area may not be in a normal condition. This option allows you to program the panel's response to these bad zones. This option is not displayed if **AUTO ARM** is **NO**.

BYP: All bad zones are bypassed. A report of the bypass is sent to the receiver if bypass reports has been set as **YES**. The report indicates **SCH** as the user number.

FORC: All bad zones are force armed. Zones force armed in a bad condition are capable of restoring into the system and reporting alarms if tripped. A report of the force arm is sent to the receiver. The report indicates the user number as **SCH**.

REF: The automatic arming is refused and no arming takes place. Closing report is sent to the receiver.

AUTO DIS **NO** YES

AUTOMATIC DISARMING

Choose **NO** to disable automatic disarming by schedule for this area. The default is **NO**.

Choose **YES** to allow this area to automatically disarm according to a schedule. If an opening report is sent to the receiver, the user number is indicated as **SCH**.

ZONE INFORMATION

ZONE INFORMATION

This allows you to define the operation of each protection zone used in the system.

ZONE NO: -

ZONE NUMBER

The communicator has four zones to program. Enter the number of the zone you intend to program. To program zone 4, see Zones 1-4 Input Connection. Press **CMD** to enter a zone name. See Letters and Special Characters.

* UNUSED *

ZONE NAME

Press any select area and enter up to 16 characters for the zone name. A name must be given to each zone in the system. The zone name is sent to the receiver as part of a zone event report. A zone that is not part of the system must be marked *__UNUSED__*. To mark a zone unused, delete the old name by pressing any select area, then press **CMD**. The programmer automatically programs the name as *__UNUSED__*. If you selected **ZONES NO YES** to clear the communicator's memory during initialization, the zones will already be marked *__UNUSED__*. See Initialization.

ZONE LOCATION

ZONE LOCATION

This feature is optional and allows you to specify a zone location, separate from the zone name. Enter a descriptive location for the zone, such as 2nd Floor East Wing. The zone location is only sent to the monitoring center to help dispatchers identify where an alarm is triggered and does not display on the keypad. You can enter up to 16 characters for the zone location name.

ZONE TYPE: BLANK

ZONE TYPE

The zone type defines the response of the communicator to the zone being open or short. When you assign a zone type to a zone, responses are made automatically for the zone. There are 13 zone types to choose from including Blank.

To select a new zone type, press any select area. The display lists the four zone types shown below. When the zone type you want to select displays, press the select area below or on the name.

--	NT	DY	EX
FI	PN	EM	SV
A1	A2	AR	FV
HU			

- Blank (**--**), Night (**NT**), Day (**DY**), or Exit (**EX**). Press **CMD** to display additional zone types.
- Fire (**FI**), Panic (**PN**), Emergency (**EM**), or Supervisory (**SV**). Press **CMD** to display additional zone types.
- Auxiliary 1 (**A1**), Auxiliary 2 (**A2**), Arming (**AR**), or Fire Verify (**FV**). Press **CMD** to display additional zone types.
- Holdup (**HU**) Press the back arrow to display the previous zone types.

If you select Blank, Night, Day, Exit, Auxiliary 1, or Auxiliary 2 as the zone type, the zone must be assigned to an area. See Zone 1-4 Input Connection. If you select Fire, Panic, Holdup, Emergency, or Supervisory as the zone type, these are 24-hour zones that are always armed and no area assignment is needed.

AREA NO: 1

Area Assignment

All non-24-hour zones are automatically assigned to area 1. Enter the area number from 1-6 where this zone is being assigned.

AREA: 1 - - - - -

Arming Zone Assignment

Specify the areas to be armed by the arming type zone. Press the appropriate numbers on the keypad to assign areas 1-6. When disarmed, all areas are disarmed.

STYLE: **TGL**

Style

Specify the style for the arming/disarming operation. The default style is **TGL** (Toggle). Press any select area to display the style options. To view more style options, press **CMD**. The following is a description of the action for each option condition.

TGL ARM DIS STEP

TGL (Toggle): When the zone changes from normal to shorted, the programmed areas toggle between the armed or disarmed condition. When restored to normal, no action occurs. When the zone is opened from a normal (disarmed) state, trouble is reported. When opened from a shorted (armed) state, an alarm is reported and the zone is disabled until you disarm the area(s) from either the Virtual Keypad App, VirtualKeypad.com, or Remote Link.

ARM: When the zone is shorted, the programmed area is armed. When restored to normal, no action occurs. When the zone is opened from a normal (disarmed) state, trouble is reported. When opened from a shorted (armed) state, an alarm is reported.

DIS (Disarm): A short will disarm the area. When restored to normal, no action occurs. When the zone is opened from a normal (disarmed) state, trouble is reported.

STEP: A short will arm the areas. A normal condition will cause no action. An open condition will disarm the areas. When using an arming/disarming keyswitch, locate the keyswitch within the protected area.

MNT

MNT (Maintain): When the zone is shorted, the programmed area is armed. When restored to normal, the area is disarmed and any alarm bells are silenced. When the zone is opened from a normal (disarmed) state, trouble is reported. If opened from a shorted (armed) state, an alarm is reported and the zone is disabled until you disarm the area from either the Virtual Keypad App, VirtualKeypad.com, or Remote Link.

NEXT ZN? NO YES

NEXT ZONE

Choose **YES** to terminate the programming for a zone. You may enter a new zone number when **ZONE NO**: - appears on the display.

Choose **NO** to make changes to the alarm action for a zone.

ALARM ACTION . . .

ALARM ACTION

Change the default alarm characteristics of a zone type. If you selected the non-24-hour zone type Blank, Night, Day, Exit, Auxiliary 1, or Auxiliary 2, the alarm action programming begins with Disarmed Open. If you selected the 24-hour zone type Panic, Emergency, or Supervisory, the alarm action programming begins with Armed Open.

DISARMED OPEN

DISARMED OPEN

Define the action taken by the communicator when the zone is opened while the area is disarmed. There are three actions to define: Message to Transmit, Output/Favorite Number, and Output Action.

You must also make these selections for the Disarmed Short, Armed Open, and Armed Short zone conditions.

MSG: **ALARM**

MESSAGE TO TRANSMIT

You can send two report types to the receiver: Alarm and Trouble. These are represented by the characters **A** and **T**. Press any select area to display the zone report options.

A T L -

ALARM: Select **A** to allow an alarm report to be sent to the receiver. The zone name appears in the communicator's alarmed zones status lists.

TROUBLE: Select **T** to allow a trouble report to be sent to the receiver and the zone name to appear in the communicator's alarmed zones status lists.

LOCAL: Select **L** to prevent sending an alarm report to the receiver. The zone name appears in the communicator's alarmed zones status lists.

– (dash): Select – to prevent sending reports to the receiver. There is no display in the communicator's alarmed zones status list. Only the programmed output number activates.

OUTPUT NO:
0

OUTPUT NUMBER

Specify an output/favorite on the communicator to activate with a zone condition. The output/favorite can be activated regardless of the report to transmit or whether or not the zone is programmed as local. An output activated by a non-24-hour armed zone is turned off when the zone's area is disarmed by a user. To enter an output number, press any select area followed by the output number 1 or 2.

ACTION:

STD PLS MOM FLW

OUTPUT ACTION

Enter an output number to display this option. This option allows you to assign an output action to the output. A description of the available output actions follows:

STD (steady): The output is turned on and remains on until the area is disarmed, an output cutoff time expires, or the output is reset from the keypad user menu.

PLS (pulse): The output alternates one second on, one second off until the area is disarmed, an output cutoff time expires, or the output is reset from the keypad user menu.

MOM (momentary): The output is turned on only once for one second.

FLW (follow): The output is turned on and remains on while the zone is in off, normal, or bad condition. When the zone restores, the output is turned off.

After you have selected the message to transmit, the display prompts you for the same three selections for Disarmed Short, Armed Open, and Armed Short conditions. If the zone is a 24-hour type, only the Armed Open and Armed Short conditions are displayed. When you have programmed all of the zone conditions, the panel displays the swinger bypass selection.

SWGR BYP NO **YES**

SWINGER BYPASS

Choose **YES** to allow the zone to be swinger bypassed by the communicator according to the programming in swinger bypass trips and reset swinger bypass.

Choose **NO** to disable swinger bypassing for this zone.

How it works

If within one hour, a zone trips the total number of times as specified in swinger bypass trips, the communicator bypasses it until the following conditions occur:

- The area in which the zone is assigned is disarmed.
- The zone is manually reset through the bypass zones keypad user menu function.
- The zone remains normal for one hour and reset swinger bypass is set to **YES**.

If the zone trips fewer than the specified times within one hour of the first trip, the bypass trip counter returns to 0 and the process must be repeated. A report of the swinger bypass is sent to the receiver if bypass reports is set to **YES**.

CRS ZONE **NO** YES

CROSS ZONE

Choose **YES** to enable cross zoning for this zone. Cross zoning requires this zone to trip twice, or this zone and another cross-zoned zone to trip, within a programmed time before an alarm report is sent to the receiver. To operate correctly, all cross-zoned zones need to be programmed as the same zone type.

When a cross-zoned zone trips, the output action assigned to the zone activates. The cross zone time specified in system options begins to count down. See Cross Zone Time. If another cross-zoned zone in the system faults, or if the first zone restores and faults again before the cross zone time expires, the bell turns on and the communicator sends an alarm report.

If no other cross-zoned zone in the system trips before the cross zone time expires, the communicator sends only a fault report from the first zone to the receiver. If cross zone is set to yes, a valid cross zone time must be programmed for this feature.

Choose **NO** to disable cross zoning for this zone. The default is **NO**.

RECEIVER ROUTING

RECEIVER ROUTING

This option displays if zone type is set for Auxiliary 1 or Auxiliary 2. Press any select area to select the receiver routing for the selected zone.

NORMAL

Select **NORM** to send alarm and supervisory/trouble messages from this zone to receiver 1 or receiver 2 as programmed within the receiver in communications.

NORM 1 2 BOTH

Select 1 to send alarm and supervisory/trouble messages from this zone to receiver 1 only, regardless of the programming for the receiver in communications.

Select 2 to send alarm and supervisory/trouble from this zone to receiver 2 only, regardless of the programming for that receiver in communications.

Select **BOTH** to send alarm and supervisory/trouble from this zone to both receivers, regardless of the programming for either receiver in communications.

ZONE NO: -

ZONE NUMBER

Enter the zone number you want to program next. Return to Zone Information and follow the descriptions of each programming option. If all zones are programmed, press the back arrow at the **ZONE NO** display to continue.

STOP

STOP

STOP

Press any select area to exit the programmer function of the communicator. When selected, the communicator performs an internal reset and exits the programmer.

SET LOCKOUT CODE

SET LOCKOUT CODE

SET LOCKOUT CODE

Press **CMD** at the stop option to display **SET LOCKOUT CODE**. This feature allows you to program a special code that will be required to gain access to the communicator's internal programmer through the keypad.

Changing the Lockout Code

You can change this code at any time to any combination of numbers from 1-5 digits long (1-65535). Do not use leading zeros for the lockout code.

1. Press any select area. The keypad displays **ENTER CODE** .
2. Enter a 1-5 digit code and press **CMD**.

   Note: Do not enter a number higher than 65535.

3. Enter the new lockout code you just entered in the keypad and press **CMD**. The keypad displays **CODE CHANGED**.

Once you have changed the code, it is important that you write it down and store it in a safe place. Lost lockout codes require the communicator to be sent back into DMP for repair. You may cancel a lockout code by entering **00000** at the set lockout code command option.

ARMING AND DISARMING

Use the Virtual Keypad App

Using a smartphone with the DMP Virtual Keypad App or a computer with VirtualKeypad.com, you can connect to the communicator to arm areas, turn outputs on and off, and add, edit, or remove users. See Figure 10.

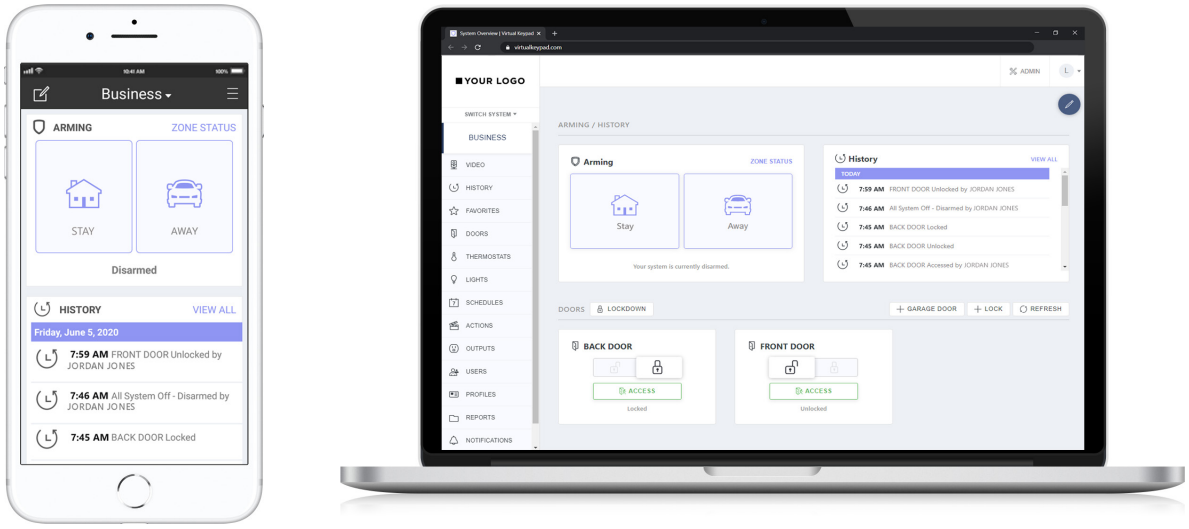

Figure 16: Virtual Keypad Applications

APPENDIX

This section provides additional zone and system information.

ECP Passthru

Program Vista Keypad Device Address 20

1. Power down and then power up the Honeywell panel.
2. Within 1 minute of powering up the Honeywell panel, simultaneously press and hold the **#** and ***** buttons on the keypad.
3. The keypad displays **INSTALLER CODE**. Enter the installer code (default is **4112**), followed by **8 0 0**.
4. Enter ***193**, then enter **1 0**.
5. To save and exit programming, enter ***99**.

User Codes in the Ademco/Honeywell Panel

Because the communicator duplicates the panel's user codes, existing user codes in the Ademco/Honeywell panel, including master, must be added to the communicator. The DualCom must also have user 2 as a master using the same user code as the host panel user 2. This is required to allow codes added via App/Browser to be sent to the host panel. Any new user codes added to the communicator from the Virtual Keypad App will be automatically entered in the Ademco/Honeywell panel.

User codes from the Ademco/Honeywell panel that are designated as master or partition master should be configured as master codes in the communicator.

If the Ademco/Honeywell panel is armed/disarmed from a keypad, the communicator reports an opening/closing message by user 0 to the central station.

When the communicator is armed by the Virtual Keypad App or VirtualKeypad.com, the Ademco/Honeywell panel is also armed and the communicator reports an opening message. If opening and closing reports are enabled in the Ademco/Honeywell panel, a duplicate message will also be sent to the central station.

Note: Communicators with Version 194 and higher do not require you to log in to the VISTA panel with a master code to manage user codes remotely.

Manually Configure Communication with the Ademco/Honeywell Panel

The following steps describe how to configure Ademco/Honeywell control panels to communicate with the communicator. Only use these steps if programming isn't configured automatically with **ECP SETUP**.

1. Program Position * 54: Enter 0. This enables no signaling delay.
2. Program Position * 55: Enter 1. This enables communication to the communicator.
3. Program Position * 84: Enter 0. This disables CP01 and allows remote Arm Away.
4. Program Position * 193: Enter 1 0. This enables the DualCom ECP Bus address.

If the Ademco/Honeywell panel fails to communicate with the communicator, program Position * 29 to enable the long range radio on the Ademco/Honeywell panel.

DSC Passthru

Remote Programming

DSC panels allow a 6-hour interval for remote programming connections after the panel is initially powered up. After that interval expires, technicians can re-enable DLS connection for another 6 hours by disarming the panel and entering the following code combination: ***6** + [*master code*] + **5**.

1. Right-click Remote Link and select **Run as administrator**.
2. If necessary, create the communicator account.
3. Double-click the communicator account.
4. Minimize Remote Link.
5. Open DLS.
6. Double-click the DSC panel.
7. Edit programming as needed, then press the Upload Programming button.

False Alarm Reduction

System Recently Armed report

The system recently armed report (S78) is sent when a burglary zone goes into alarm within two minutes of the system being armed.

Diagnostics Function

The diagnostics function allows you to test the integrity of the cellular communication, program ECP and DSC Passthu, and check panel settings. To use diagnostics, reset the communicator and enter **2313** (DIAG) at the keypad.

Carrier Selection

This option is only available when DualSIM is active. In the event that remote connectivity is unavailable, carrier options can be manually switched on the keypad. To select a single carrier, press **ATT** or **VZW**. To use DualSIM operation, select **BOTH**.

Signal Strength Test

If DualSIM is activated, the panel automatically selects a primary carrier (AT&T or Verizon) when the panel is turned on. Once the primary is established, the panel tests the signal strength of the primary every hour. During the test, if the primary's signal drops by 10db or more, the panel then tests the backup carrier. If the backup has a stronger signal, it becomes the new primary. Every five hours, the panel automatically tests the backup's signal strength to determine the stronger signal.

Communication Status

This option tests the individual components of cellular communication. The selected test will proceed until the first component failure or until all components have been tested with positive results. The test screen will display after each component and will be displayed for two seconds or until **CMD** has been pressed.

Note: If DualSIM is active, an option to select **ATT** or **VZW** appears before testing proceeds. Select one of the carriers to test it.

```
        -XX dBm
SIGNAL: ▌▌▌▌▌▌▌
```

Cellular Signal Strength (CELL SIGNAL)

Test the cellular signal strength of the nearest carrier tower. Press any select area to display cell signal strength. The X's represent the numerical value of the cell signal strength in -dBm. The bars represent signal strength 0-7.

Panel Settings

Press a top row key to access the serial number, model, and firmware version.

Serial Number

This number is the communicator serial number. Reference this number for communicator date-of-manufacture and hardware version. Press any select area to display the serial number.

Model Number

This menu option displays the model number of the communicator.

Firmware Version

This menu option displays the firmware version number of the communicator and date it was released.

Contact ID Recvd

This displays DTMF digits dialed from the burglary control panel.

ECP Setup

Automatically program ECP Passthru settings. This option is only available when **KYPD INPUT** is set to **ECP**.

1. Ensure keypad address 20 is programmed into the VISTA panel. Ensure the ECP panel IP address is set as default. Advance to **ECP SETUP** and press any select key or area.
2. At **ECP SETUP VISTA 128?** If the panel is a VISTA 128, select **YES**. If the panel is a different model, select **NO**.
3. At **INST CODE**, enter the ECP panel installer code and press **CMD**.
4. After configuration is finished, the keypad advances to **GET ZONES**. Press any select key or area.

As the communicator retrieves zones from the ECP panel, the number of zones is displayed and incremented as **ZONE CT** (zone count).

DSC Setup

Automatically program DSC Passthru settings. This option is only available when **KYPD INPUT** is set to **DSC**.

1. Ensure the DSC panel IP address is set as default. Advance to **DSC SETUP** and press any select key or area.
2. At **INST CODE**, enter the DSC panel installer code and press **CMD**.
3. After configuration is finished, the keypad advances to **GET ZONES**. Press any select key or area.
4. At **INST CODE**, enter the DSC panel installer code and press **CMD** to retrieve zones.

As the communicator retrieves zones from the DSC panel, the number of zones is displayed and incremented as **ZONE CT** (zone count).

Press any select key or area to initiate **DSC SETUP**. At **INST CODE**, enter the DSC panel installer code and press **CMD**. After attempting to program the DSC panel, the menu advances to **GET ZONES**. Press any select key or area to retrieve zones from the panel.

Exiting the Diagnostics program

Press **CMD** until **STOP** displays. Press any select area. The keypad returns to the status list display.

Using the 984 Command Function

When not in the programming menu, the function **984** + **CMD** can be entered at the keypad. The remote options menu appears. This menu contains the following options:

CELL

The communicator allows you to perform a test on each component of the cellular communication paths. While the status list displays, enter **984** and press **CMD**. Press the select area under **CELL** to allow the communicator to perform a communication status test. The keypad displays **CELL IS BUSY** if the modem is being tested from another keypad.

Upon entry of a cellular path when prompted, the test runs and the results display on the keypad in the order they were tested: **MODEM OPERATING**, **IDENTIFIED**, **TOWER DETECTED**, **REGISTERED**, **CONNECT SUCCESS**, and **CELL COM GOOD**. Press **CMD** to advance through the results. When the test is complete you are returned to the status list. See Diagnostic Functions for a description of the cellular status results.

Using the Walk Test

The walk test feature allows a single technician to test all zones on the system. Conduct the walk test within 30 minutes of resetting the communicator. The walk test automatically ends if no zones are tripped for 20 minutes. **TEST IN PROGRESS** displays at all keypads. When five minutes remain, **TEST END WARNING** displays. If any areas are armed, the walk test does not start and **SYSTEM ARMED** displays.

```
WALK TEST
```

WALK TEST

To conduct the walk test, reset the communicator by momentarily pressing the reset button. From the keypad, enter **8144**. The keypad displays **WALK TEST**. If the system is monitored , the system sends a system test begin report to the central station. All programmed zones are included in the test.

```
WALK TEST
TRIPS: XXX        END
```

TRIP COUNTER FOR WALK TEST (STD)

Displays the number of zone trips during the walk test. Each time a selected zone trips, the keypad buzzes.

END - Press this select area to stop the walk test. When the walk test ends or a 20 minute timeout expires, a final sensor reset occurs. The system test end message is sent to the receiver along with verify and fail messages for each zone under test. Faulted zones display on the keypad.

```
TEST END WARNING
```

TEST END WARNING

When no zones have been tripped and five minutes remain on the 20 minute walk test timer, the keypad displays **TEST END WARNING** and the keypad tones. If no additional test zone trips occur, the test ends and a final sensor reset automatically occurs. The system test end message is sent to the receiver along with verify and fail messages for each zone under walk test. Faulted zones display on the keypad.

```
SOUTH LOBBY
ZONE: 10          -FAIL
```

FAILED ZONES DISPLAY

Each zone that did not trip at least once during the walk test displays on the keypad that initiated the test. Any Panic (**PN**) or Supervisory (**SV**) 24-hour zone that is faulted at the end of the walk test displays a trouble condition for that zone regardless of the message programmed for the open or short condition of the zone and a zone trouble is sent to the receiver. Press **CMD** to display the next failed zone.

Cross Zoning

Caution must be taken when cross zoning devices to ensure that the cross zone time is long enough to allow a trip of both zones before it expires. A cross zone time that is too short may allow a trip of the zones and only a zone fault report be sent to the central station.

When a cross zoned zone trips, a FAULT report is sent to the SCS-1R or SCS-VR receivers. When two cross zoned zones trip within the cross zone time, both zones send ALARM signals to the receiver. For example, if zones 1 and 2 are cross zoned zones, and only zone 1 trips, a FAULT report is sent to the receiver for zone 1. If zone 1 trips and zone 2 trips within the cross zone time, an ALARM report is sent to the receiver for zone 1 and zone 2.

Note: To operate correctly, all cross-zone zones need to be programmed as the same zone type.

Arming/Disarming Ademco Vista Panels

The following steps describe how to configure the communicator to arm and disarm an Ademco Vista control panel from a schedule or remotely from the Virtual Keypad App, VirtualKeypad.com, or Remote Link™ using the remote arming output.

1. Connect output 17 (far left pin on the 7 pin header located in the middle of the PCB) to zone 1 (Z1) on the communicator. Connect a 1k ohm EOL resistor from zone 1 to ground (G).
2. Connect output 1 (O1) on the communicator to zone 3 (terminal 12) on the Vista control panel.
3. Begin programming by entering the installer code followed by **800**. Press * and **Field ?** displays.
4. Program zone 3 as an arming zone. Enter **56** and program the following:
    a. **Set to Confirm?** - Enter **0**.
    b. **Enter Zn Num.** - Enter **03**. Press * to continue.
    c. **Summary Screen: Zn ZT P RC HW:RT** - Press * to continue.
    d. **Zone Type** - Enter **77**. Press * to continue.
    e. **Report Code 1st 01 2nd 00 10** - Press * to continue.
    f. **Hardware Type** - Enter **0**. Press * to continue.
    g. **Resp Time** - Enter **1**. Press * to continue.
    h. **Summary Screen: Zn ZT P RC HW:RT** - Press * to continue.
    i. **Program Alpha** - Enter **0**.
    j. **Enter ZN Num** displays. Enter **00** to exit.
5. Program output 17. **Enter * or #** displays. Press * and **Field?** displays. Enter **79** and program the following:
    a. **Enter output No** - Enter **17**. Press * to continue.
    b. **Output Normally Low** - Enter **0**. Press * to continue.
    c. **Enter Output No** displays. Enter **00** to exit.
6. Define output 17 actions. **Enter * or #** displays. Press * and **Field?** displays. Enter **80** and program the following:
    a. Program output 17 to turn on when armed Stay. **Output Funct#** - Enter **01**. Press * to continue.
        - **Summary Screen: 01 A E P Trig** - Press * to continue.
        - **Activated by: - Enter 2**. Press * to continue.
        - **Enter Zn Type** - Enter **20**. Press * to continue.
        - **Output Action** - Enter **2**. Press * to continue.
        - **Enter Output No.** - Enter **17**. Press * to continue.
        - **Summary Screen: 01 A E P Trig** - Press * to continue.
    b. Program output 17 to turn on when armed Away. **Output Funct#** - Enter **02**. Press * to continue.
        - **Summary Screen: 02 A E P Trig** - Press * to continue.
        - **Activated by:** - Enter **2**. Press * to continue.
        - **Enter Zn Type** - Enter **21**. Press * to continue.
        - **Output Action** - Enter **2**. Press * to continue.
        - **Enter Output No.** - Enter **17**. Press * to continue.
        - **Summary Screen: 02 A E P Trig** - Press * to continue.
    c. Program output 17 to turn off when Disarmed. **Output Funct#** - Enter **03**. Press * to continue.
        - **Summary Screen: 03 A E P Trig** - Press * to continue.
        - **Activated by:** - Enter **2**. Press * to continue.
        - **Enter Zn Type** - Enter **22**. Press * to continue.
        - **Output Action** - Enter **0**. Press * to continue.
        - **Enter Output No.** - Enter **17**. Press * to continue.
        - **Summary Screen: 03 A E P Trig** - Press * to continue.
    d. **Output Funct#** - Enter **00**. Press * to continue.
7. **Enter * or #** displays. Press * and **Field?** displays. Enter **99** to exit programming.
8. Programming the communicator.
    a. Reset the communicator. Enter **6653**.
    b. Press **CMD** to output options. Press any select area.
    c. Program output 1 in remote arming output. Press **CMD** to **RMT ARMG OUT**. Enter **1**, then press **CMD**.
    d. Press **CMD** to zone information. Press any select area and **Zone No** displays.
    e. Enter **1**. Press **CMD**.
    f. Enter a zone name. Press **CMD**.
    g. Program zone 1 as an arming zone. **Zone Type** displays. Choose arming zone type **AR**. Press **CMD**.
    h. **Area: 1------** displays. Press **CMD**.
    i. **Style: TOGGLE** displays. Choose **MNT**.
    j. Go to **STOP** then press and select key to save and exit programming.

Ademco Vista 20P to CellCom Series for Remote Arming/Disarming

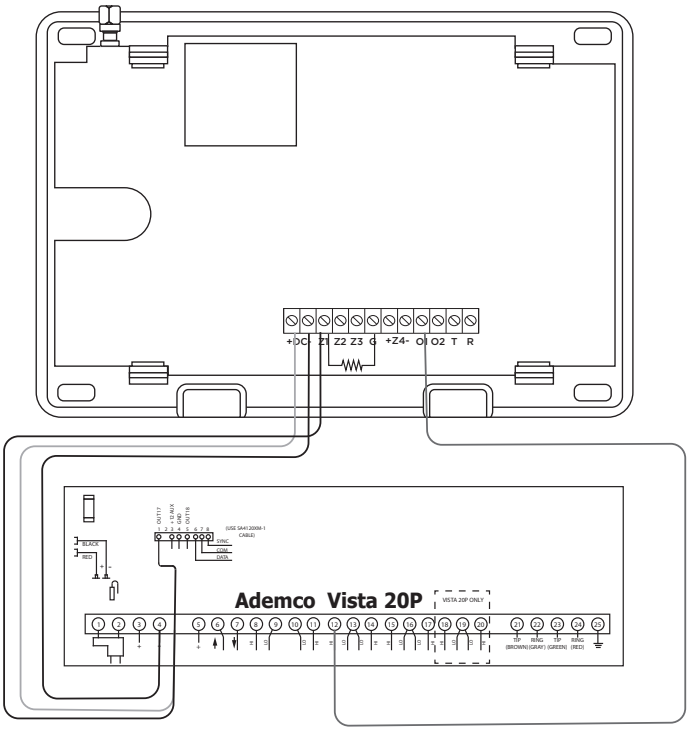

Figure 17: Ademco Vista 20P to CellCom Series

DMP XRSuper6 to CellCom Series for Remote Arming/Disarming

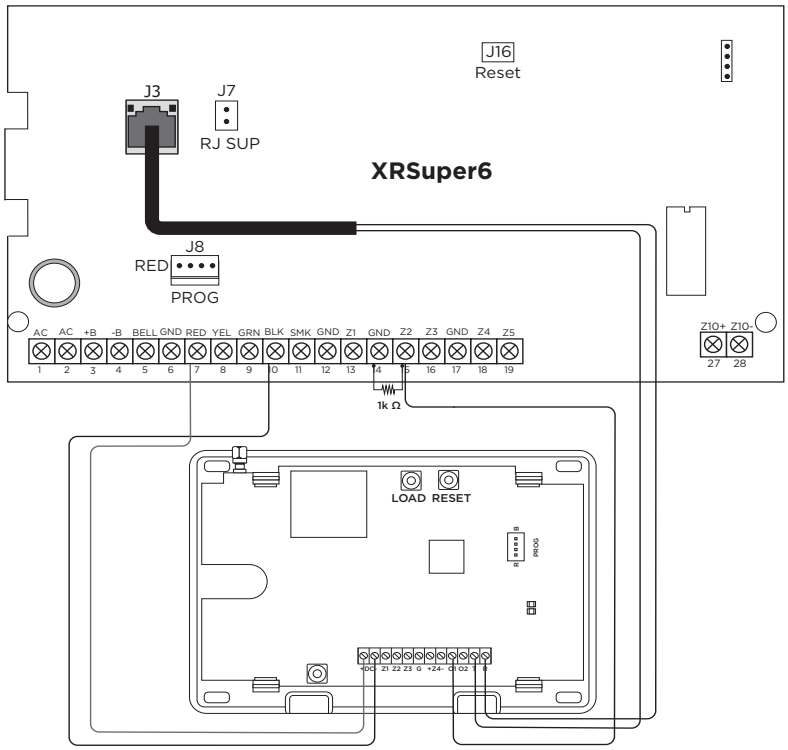

Figure 18: DMP XRSuper6 to CellCom Series

Bosch Control Panel Option Bus to CellCom Series for Reduced Noise Disturbance

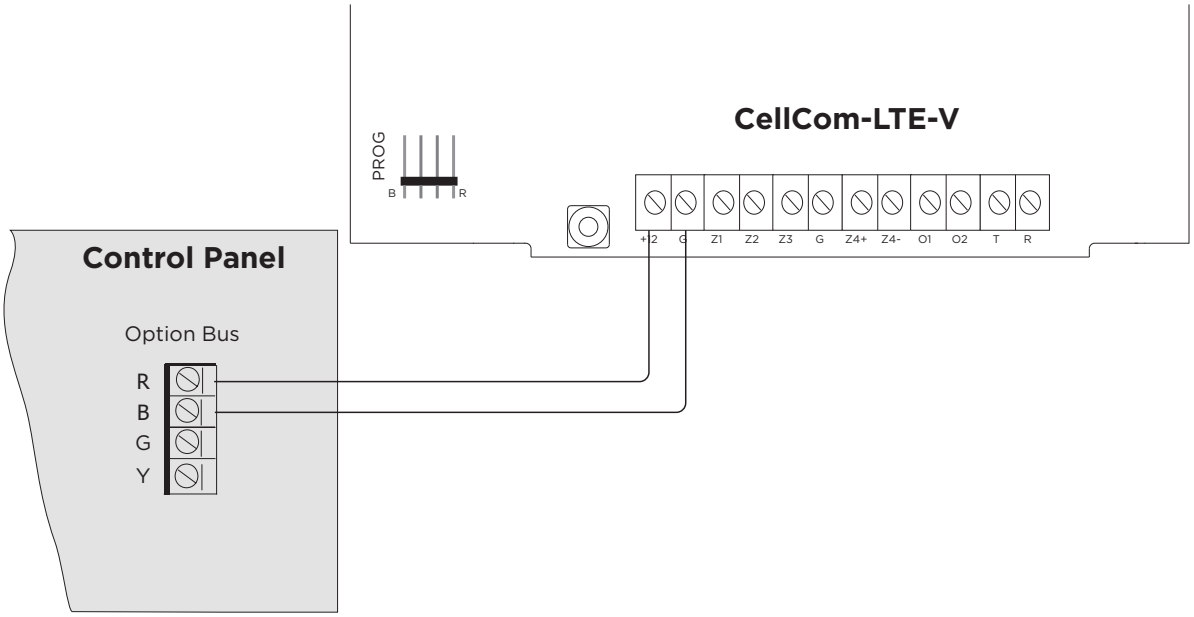

Figure 19: Bosch Control Panel Option Bus to CellCom Series

FCC NOTICE

This device complies with part 15 of the FCC Rules. Operation is subject to the following two conditions:

1. This device may not cause harmful interference.
2. This device must accept any interference received, including interference that may cause undesired operation.

The antenna(s) used for this transmitter must be installed to provide a separation distance of at least 20 cm from all persons.

This equipment has been tested and found to comply with the limits for a Class B digital device, pursuant to part 15 of the FCC Rules. These limits are designed to provide reasonable protection against harmful interference in a residential installation. This equipment generates, uses and can radiate radio frequency energy and, if not installed and used in accordance with the instructions, may cause harmful interference to radio communications. However, there is no guarantee that interference will not occur in a particular installation.

If this equipment does cause harmful interference to radio or television reception, which can be determined by turning the equipment off and on, the user is encouraged to try to correct the interference by one or more of the following measures:

- Reorient or relocate the receiving antenna.
- Increase the separation between the equipment and receiver.
- Connect the equipment into an outlet on a circuit different from that to which the receiver is connected.
- Consult the dealer or an experienced radio/TV technician for help.

Changes or modifications not expressly approved by the party responsible for compliance could void the user's authority to operate the equipment.

If necessary, the installer should consult the dealer or an experienced radio/television technician for additional suggestions. The installer may find the following booklet, prepared by the Federal Communications Commission, helpful:

"How to Identify and Resolve Radio-TV Interference Problems."

This booklet is available from the U.S. Government Printing Office, Washington D.C. 20402

Stock No. 004-000-00345-4

INDUSTRY CANADA

This device complies with Industry Canada license-exempt RSS standard(s). Operation is subject to the following two conditions: (1) this device may not cause interference, and (2) this device must accept any interference, including interference that may cause undesired operation of the device.

Le présent appareil est conforme aux CNR d'Industrie Canada applicables aux appareils radio exempts de licence. L'exploitation est autorisée aux deux conditions suivantes : (1) l'appareil ne doit pas produire de brouillage, et (2) l'utilisateur de l'appareil doit accepter tout brouillage radioélectrique subi, même si le brouillage est susceptible d'en compromettre le fonctionnement.

NFPA 72

(CellComF Only)

This equipment should be installed in accordance with Chapter 29 of the National Fire Alarm Code, ANSI/NFPA 72, (National Fire Protection Association, Batterymarch Park, Quincy, MA 02269). Printed information describing proper installation, operation, testing, maintenance, evacuation planning, and repair service is to be provided with this equipment.

Warning: Owner's instruction notice, not to be removed by anyone except occupant.

Specifications

CellCom-LTE-V/CellCom-2

Primary Power	Nominal 12 VDC
Current Draw	12 VDC:
Standby	75 mA
Alarm	95 mA (Cell Communication)

CellComF-LTE-V/CellComF-2

Primary Power	Nominal 12 VDC or 24 VDC
Current Draw	12 VDC:
Standby	75 mA
Alarm	95 mA (Cell Communication)
Current Draw	24 VDC:
Standby	45 mA
Alarm	85 mA (Cell Communication)

Dimensions and Color

Housing Dimensions	5.50” W x 3.75” L x 1.00” H

Housing Color

CellCom-LTE-V	White
CellComF-LTE-V	Red

Ordering Information

CELLCOM-LTE-V	Universal LTE Alarm Communicator (white housing)
CELLCOMF-LTE-V	Universal LTE Fire Alarm Communicator (red housing)
CELLCOM-2	Universal LTE Alarm Communication for AT&T and Version

Accessories

685-W	Surface Mount Conduit Backbox (white)
685-R	Surface Mount Conduit Backbox (red)
383P	Cellular Paddle Antenna LTE
330-DSC	DSC Remote Programming Harness

Compatibility

ECP Passthru

VISTA 15
VISTA 20
VISTA 21
VISTA 128

DSC Passthru

PC1616
PC1832
PC1864

Certifications

Cellular

FCC Part 15: XMR201707BG96
IC: 10224A-201709BG96

New York City (FDNY)

CellComF-LTE-V

Underwriters Laboratories (UL) Listed

CellCom-LTE-V

ANSI/UL 1610 Central Station Burglar
ANSI/UL 1023 Household Burglar
ANSI/UL 985 Household Fire Warning (CID Capture/Zone Capture)

CellComF-LTE-V

ANSI/UL 864 Commercial Fire Protective Signaling Systems (CID Capture/Zone Capture)

Designed, engineered, and manufactured in Springfield, MO using U.S. and global components
LT-1817 1.01 26113
© 2026

INTRUSION • FIRE • ACCESS • NETWORK
2500 North Partnership Boulevard
Springfield, Missouri 65803-8877
800.641.4282 | DMP.com