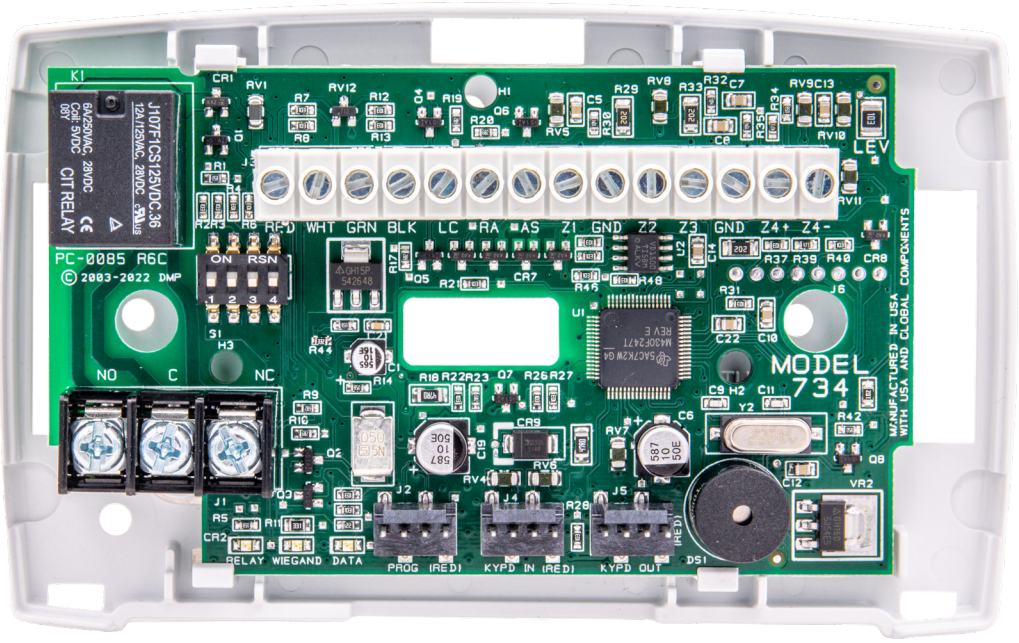

INSTALLATION AND PROGRAMMING GUIDE

734
Access Control Module

CONTENTS

Get Started 1
What's Included 1
What You'll Need 1
Procedure 1
About the 734 2
Power Supply 2
Zone Terminals 2
Annunciators 2
Indicator LEDs 2
Form C Relay 2
Programming Connection 2
Wiegand and OSDP Reader Support 2
Keypad In and Out Connections 2
734 PCB Features 3
Install the 734 4
Mount the 734 4
Wire the Access Control Lock 4
Wire the 734 4
Isolation Relay (Optional) 5
Install the 333 Suppressor 5
Wire the Zone Terminals 6
Connect a Wiegand Card Reader 6
Connect an OSDP Card Reader 7
Set the 734 Address 9
Connect the Power Supply 11
Program the Panel 12
Device Setup 12
Device Number 12
Device Name 12
Device Type 12
Communication Type 12
Program the 734 13
Programmer Menu 13
Initialization Options 13
Access Options 13
Reader Protocol Type 13
Activate Zone 2 Bypass 14
Activate Zone 3 Request to Exit 15
Activate Onboard Speaker 15
Card Formats 16
Require Site Code 17
Number of User Code Digits 17
Card Format Added/Changed (Custom Format) 18
No Communication with Panel 18
Remove Keypad 18
Additional Information 19
Public Card Formats 19
Readers and Credentials 19
Reference 20
UL Commercial Fire 20
UL Access Control 20
UL Commercial Burglary (XR Series Control Panels) 20
Wiring Specifications 20
Specifications 21
Compatibility 21
Wiegand 21
OSDP 21
Certifications 21
Underwriters Laboratory (UL) Listed 21
FCC Information 22
Industry Canada Information 22

GET STARTED

The 734 Access Control Module allows you to use the powerful, built-in access control capability of DMP Panels using smartcard, proximity, mag stripe, or biometric readers and other compatible authentication devices.

What's Included

- One 734 Access Control Module
- Mounting base
- Three screws (#6 x 1")
- Three Standoffs

What You'll Need

- 5/64" (2.0mm) drill bit
- #2 Phillips screwdriver

Procedure

To install a 734 module, this guide walks you through these required steps:

1. Install the 734 module.
2. Program the panel.
3. Program the 734 module.

ABOUT THE 734

Power Supply

The 734 operates at 12/24 VDC from the power supply supporting a door's magnetic lock or door-strike.

Warning: To avoid the risk of equipment damage, do not exceed 750 mA total output current for zones connected to the module.

Zone Terminals

Zones 1, 2, and 3 on the 734 can be programmed for a variety of burglary or access control applications. Zone 4 is a class B, style A circuit that may be programmed as a fire zone.

Annunciators

An onboard programmable piezo provides local annunciation at the 734. You can also connect a variety of switched ground annunciators to the 734 for remote annunciation.

Indicator LEDs

The 734 provides three indicator LEDs:

- RELAY (red) turns on for the same duration as the door strike relay.
- WIEGAND (yellow) turns on for one second to indicate receipt of valid input.
- DATA (green) indicates that the module is communicating with the panel.

Form C Relay

The 10 Amp Form C relay draws up to 35 mA of current. Refer to Wire the Access Control Lock and Isolation Relay (Optional) in this document for more information.

Programming Connection

The 734 provides a keypad programming connection that allows you to use a standard DMP LCD keypad for initial setup. Programming can be completed using a keypad connected to the 734 or from XR Series or XT75 Control Panels.

Wiegand and OSDP Reader Support

The 734 supports both Wiegand and OSDP card readers. For information on compatible readers, refer to Readers and Credentials. OSDP support requires 734 modules with firmware Version 106 (12/9/19) and Hardware Level 102.

Keypad In and Out Connections

The Keypad In (KYPD IN) connection receives and transmits data to the panel Keypad Bus or AX-Bus.

The Keypad Out (KYPD OUT) connection receives and transmits data out to other keypads or modules. Install a dual connector four-position harness to allow daisy chain connection to other devices, up to the maximum number of devices supported. XT Series and XR150 Control Panels support up to 8 devices. XR550 Control Panels support up to 16 devices. When using the AX-Buses with XR550 devices, you can have 32 doors, expandable to 96.

Caution: When the 734 is powered with 24 VDC, the only device that can be connected to the KYPD OUT header is another 734 powered with 24 VDC.

734 PCB FEATURES

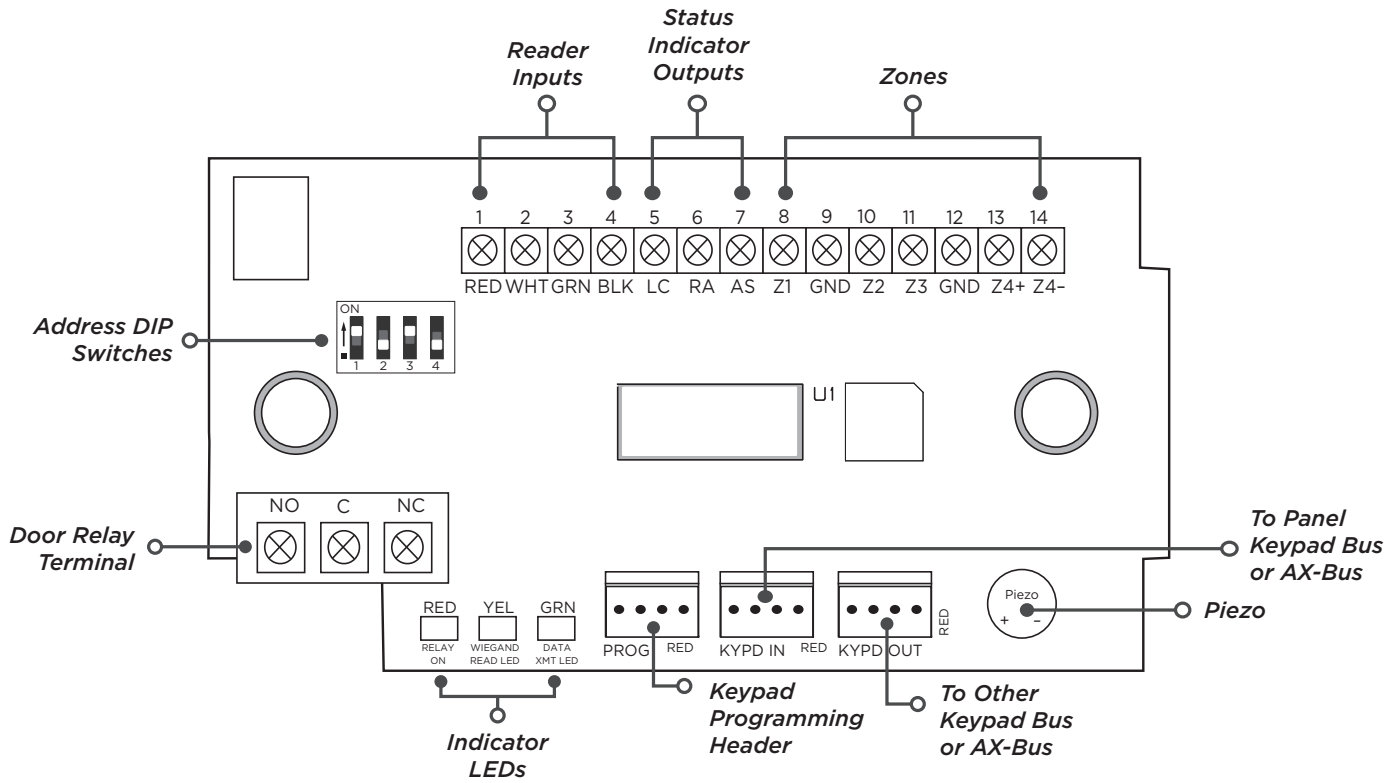

Figure 1: 734 Layout

INSTALL THE 734

1 Mount the 734

The module comes in a high-impact plastic housing that you can mount directly to a wall, backboard, or other flat surface.

For easy installation, the back and ends of the 734 housing have wire entrances. The back also contains multiple mounting holes that allow you to mount the module on a single-gang switch box. DMP recommends mounting the 734 near the protected door. Refer to Figure 2 for mounting hole locations on the housing base.

1. Remove the PCB from the plastic housing by loosening the clips on one side and gently lifting it out of the housing base.
2. Insert the included screws in the desired mounting hole locations and tighten them to secure the housing to the surface.
3. Reinstall the PCB in the housing base.

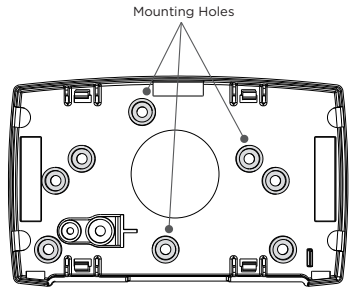

Figure 2: Mounting Hole Locations

2 Wire the Access Control Lock

The 734 provides a Form C (SPDT) relay for controlling locks and other electronically-controlled barriers. The three relay terminals marked NO C NC allow you to connect the device wiring to the relay for module control.

Use an additional power supply to power magnetic locks and door strikes. See Figure 3 and Figure 4 for typical magnetic lock and door strike wiring.

The Form C relay draws up to 35 mA of current and contacts are rated for 10 Amps (resistive) at 12/24 VDC. When connecting multiple locks to the Form C relay, the total current for all locks cannot exceed 10 Amps. If the total current for all locks exceeds 10 Amps, problems may arise and an isolation relay may be needed. Refer to "Isolation Relay (optional)" for more information.

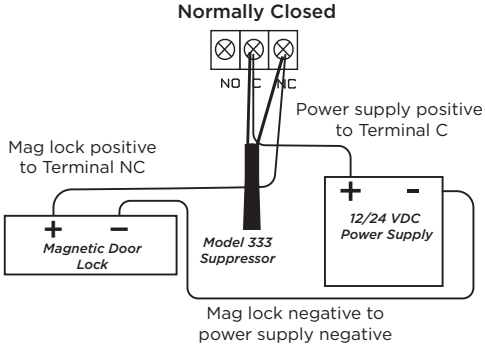

Figure 3: Typical Magnetic Lock Wiring

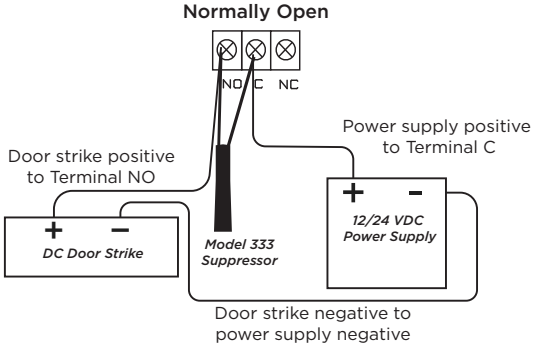

Figure 4: Typical Door Strike Wiring

3 Wire the 734

KYPD IN / KYPD OUT Connections

- KYPD IN (Keypad In): Receives and transmits data to the panel Keypad bus/AX-Bus.
- KYPD OUT (Keypad Out): Receives and transmits data out to other keypad(s) or module(s). Install a dual-connector harness to allow connection to other devices up to the maximum number of devices supported.

Caution: When the 734 is powered from 24 VDC, do not connect devices to KYPD OUT header.

Status LEDs

The 734 board contains three status LEDs.

- The Red LED turns on for the same duration as the door strike relay.
- The Yellow LED turns on for one second to indicate receipt of a valid input determined by card format programming.
- The Green LED indicates data sent to the panel.

4 Isolation Relay (Optional)

The Form C relay can control a device that draws less than 10 Amps of current. If a device draws more than 10 Amps of current, or the sum of all devices controlled by the Form C relay exceeds 10 Amps, an isolation relay must be used. Refer to Figure 5 and Figure 6 for isolation relay wiring.

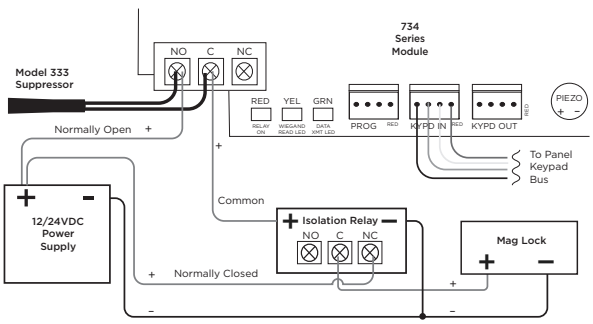

Figure 5: Magnetic Lock with an Isolation Relay

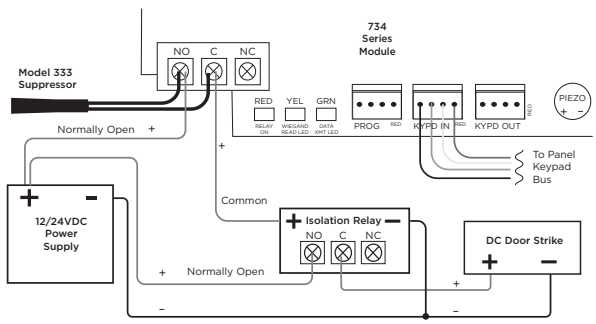

Figure 6: Door Strike with an Isolation Relay

5 Install the 333 Suppressor

Use the included 333 suppressor with the 734 to suppress any surges caused by energizing a magnetic lock or door strike.

Install the 333 across the module's C (common) and NO (normally open) or NC (normally closed) terminals.

If the device being controlled by the relay is connected to the NO and C terminals, install the suppressor on the NO and C terminals.

Conversely, if the device is connected to the NC and C terminals, install the 333 Suppressor on NC and C terminals.

The suppressor wire is non-polarized. Install the suppressor as shown in Figure 7.

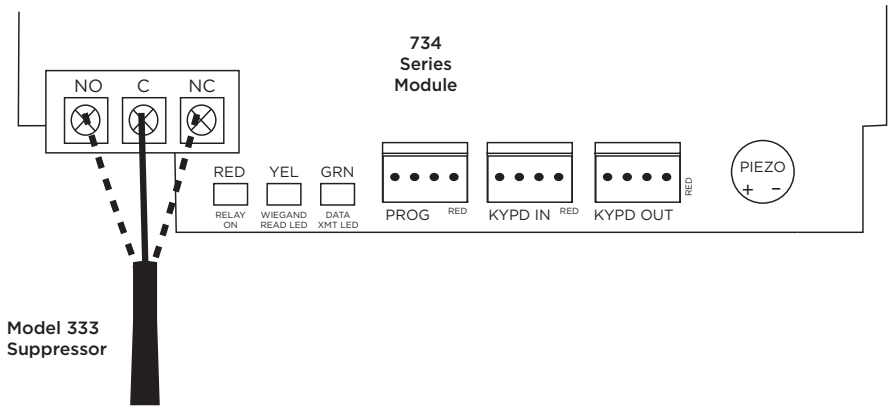

Figure 7: 333 Suppressor Installation on the 734

6 Wire the Zone Terminals

Terminals 8 through 12 connect grounded zones 1 through 3. These zones have a grounded side and cannot be used for fire-initiating devices. Zones 2 and 3 can also be used for access control with zone 2 providing a bypass feature and zone 3 providing request to exit functionality.

Terminals 13 and 14 connect to zone 4. Zone 4 provides a non-powered Class B ungrounded zone suitable for connection to fire devices such as heat detectors or pull stations.

Note: You must provide a mechanical means of resetting four-wire smoke detectors or other latching devices on zone 4. The panel does not drop power to the Keypad Bus or AX-Bus when a Sensor Reset is performed.

Use the supplied 311 1k Ohm End-of-Line (EOL) resistors on each zone. Refer to the panel programming guide for programming instructions. See Table 1 and Figure 8 for more information on wiring the zone terminals.

ZONE #	RECOMMENDED DEVICE	RESIDENTIAL FIRE DEVICE?
1	Any burglary device	No
2	Door contact	No
3	REX (PIR or Button)	No
4	Any Device	Yes

Table 1: 734 Zone Uses

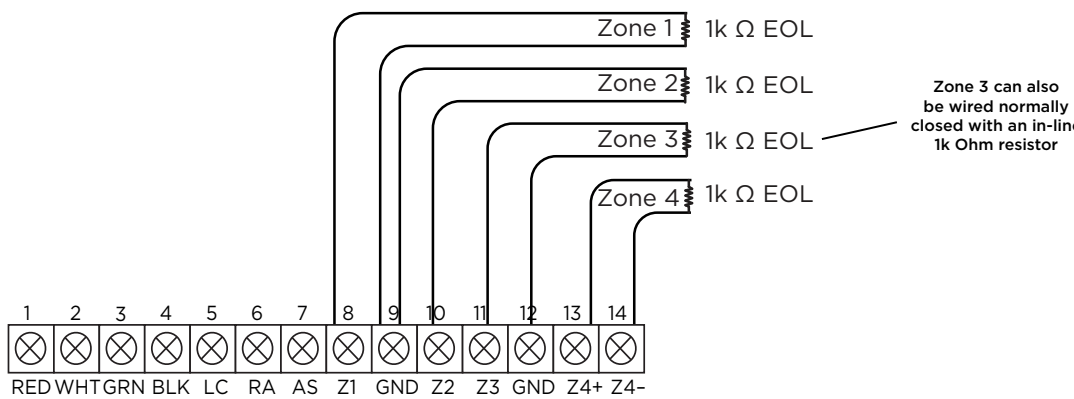

Figure 8: Zone Terminal Wiring

7a Connect a Wiegand Card Reader

The 734 provides direct 12/24 VDC output to the reader on the Red terminal connection. Figure 9 shows a reader with wire colors RED, WHT, GRN, and BLK connecting to Terminals 1, 2, 3, and 4.

The green wire carries Data Zero (D0), and the white wire carries Data One (D1). The red wire connects 12/24 VDC and the black wire is ground.

The wire colors may be different depending on the reader being installed. Refer to the literature provided with the reader for wire coding, wire distance, cable type (such as shielded), and other specifications.

Wiegand Status Indicator Outputs

Terminals 5, 6, and 7 provide connections for Remote LED Control, Remote Annunciation, and Armed Status indicators.

LC (Remote LED Control)

Remote LED Control provides an unsupervised switched ground for a visual indicator that turns on when the relay activates. Connect the wire from the LC Terminal to an LED. The LED turns on for the duration the door strike relay is on. HID readers optionally provide a connection for LED reader control.

LC WIRE COLOR	LED COLOR
Orange	Green
Brown	Red

RA (Remote Annunciation)

Remote Annunciation provides an unsupervised switched ground for a remote annunciator that turns on when the Zone 2 Bypass timer expires. Connect the wire from the RA Terminal to a remote annunciator. The remote annunciator silences when the RA restores. The remote annunciator (RA) switched ground operates even if the speaker is programmed not to operate.

AS (Armed Status)

Armed Status provides an unsupervised switched ground for a visual or audible armed status indicator that turns on when the burglary areas are armed, such as SYSTEM ON or ALL SYSTEM ON. Connect a wire from the AS Terminal to an armed status indicator.

Caution: Status indicator outputs support a maximum of 100 mA per terminal. Exceeding the maximum rating on LC, RA, or AS terminals can damage equipment.

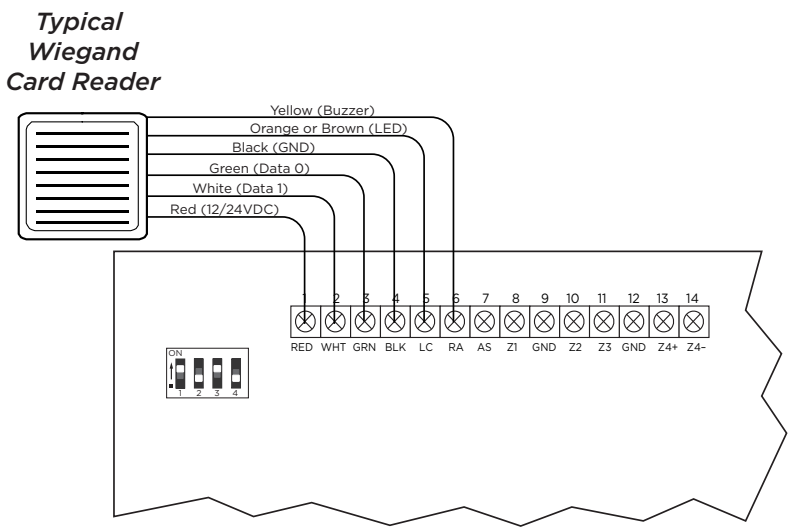

Figure 9: Wiegand Card Reader Wiring

7b Connect an OSDP Card Reader

The 734 provides 12/24 VDC to the reader on the RED terminal connection and two-way data transmission on the GRN and WHT connection. Only one OSDP reader can be connected to a module.

Use 24 AWG or larger two conductor RS-485 cable to connect a reader to module terminals. For data transmission, connect the A (485 +) wire to the GRN terminal and the B (485 –) wire to the WHT terminal. For reader power, connect the red (DC +) wire to the RED terminal and the black (DC –) wire to the BLK terminal. Refer to Figure 10.

Wire colors may be different depending on the reader. Refer to literature provided with the reader for wire coding, distance, and other specifications.

Note: OSDP card readers require 734 Access Control modules with firmware Version 106 (12/9/19) and Hardware Level 102.

OSDP Reader LED Operation

OSDP readers connected to 734 modules provide visual indication of relay condition, connection type, and encryption status with a red and green LED. Enable reader LED operation in **LED CONTROL**.

If enabled, the reader LED is turned on and operates the same as a Wiegand reader LED, lighting green when the module relay activates. Visual indication for connection and encryption status functions as follows:

- **Fast blink (50 ms interval)**—Connection secure, encrypted with 128-bit AES and your custom secure key.
- **Slow blink (100 ms interval)**—Connection encrypted with the default SIA secure key.

The LED is not controlled by the device.

OSDP Reader Annunciation

OSDP readers connected to 734 modules provide audible indication of card reads. Enable reader annunciation in **BUZZER CONTROL**.

If enabled, the reader's internal annunciator follows normal RA terminal operation.

If disabled, the reader's internal annunciator will beep once when a credential is presented.

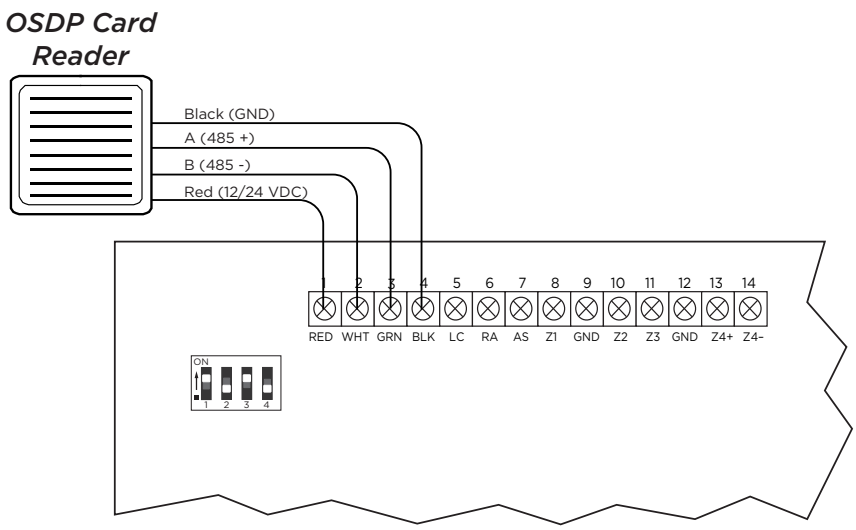

Figure 10: OSDP Card Reader Wiring

OSDP Status Indicator Outputs

Terminals 6 and 7 provide connections for Remote Annunciation and Armed Status indicators.

RA (Remote Annunciation)

Remote Annunciation provides an unsupervised switched ground for a remote annunciator that turns on when the Zone 2 Bypass timer expires. Connect the wire from the RA Terminal to a remote annunciator. The remote annunciator silences when the RA restores. The remote annunciator (RA) switched ground operates even if the speaker is programmed not to operate.

AS (Armed Status)

Armed Status provides an unsupervised switched ground for a visual or audible armed status indicator that turns on when the burglary areas are armed, such as SYSTEM ON or ALL SYSTEM ON. Connect a wire from the AS Terminal to an armed status indicator.

Caution: Status indicator outputs support a maximum of 100 mA per terminal. Exceeding the maximum rating on LC, RA, or AS terminals can damage equipment.

HID Signo OSDP Card Reader Wiring

When using OSDP mode on a HID Signo card reader, the typical wiring is switched. When using Wiegand mode, the wiring will stay the same.

The HID Signo card reader should be wired as follows:

- Red to Red
- Green to White
- White to Green
- Black to Black

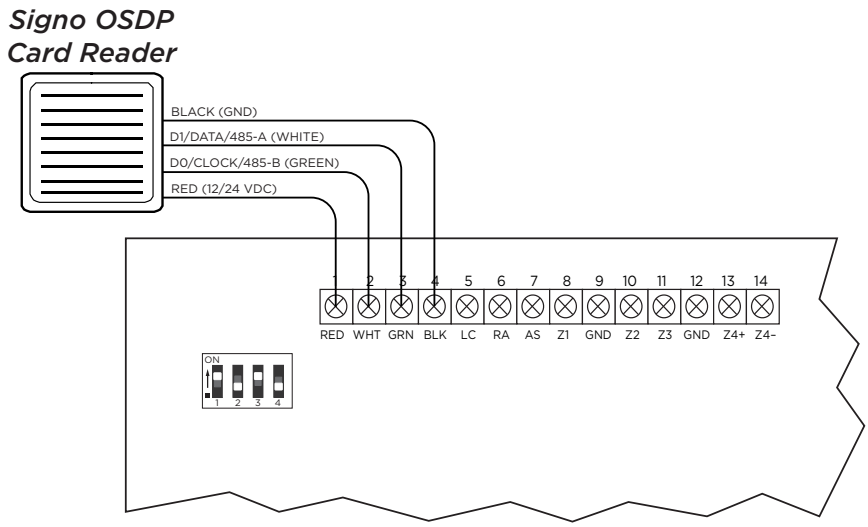

Figure 11: Signo OSDP Card Reader Wiring

8 Set the 734 Address

To set the 734 address, move the DIP switches on the PCB to the appropriate positions. See the following sections, Figure 11, and Table 2 to determine how to set Keypad Bus or AX-Bus addresses.

Keypad Bus Addresses Explained

Each Keypad Bus address can accommodate one door output and four expansion zones. A 734 with an address of 2 on the Keypad Bus would represent door 2 and zones 21-24. A 734 with a keypad address of 14 would represent door 14 and zones 141-144.

AX-Bus Addresses Explained

XR550 Control Panels are capable of access control expansion using any of the five AX/LX-Bus headers (AX/LX500, 600, 700, 800, and 900). An AX-Bus address can accommodate one door output and one expansion zone. Because the 734 has a built-in four-zone expander, three extra zones will be mapped to the 734 automatically.

A 734 with an address of 1 on AX500 would represent door 501 and zones 501-504. A 734 with an address of 2 on AX500 would represent door 505 and zones 505-508. A 734 with an address of 1 on AX700 would represent door 701 and zones 701-704.

Note: Hardwired zone expanders and modules do not communicate on an AX-Bus. Doors connected to the AX-Bus do not have programmable device or communication types and do not have assignable display areas.

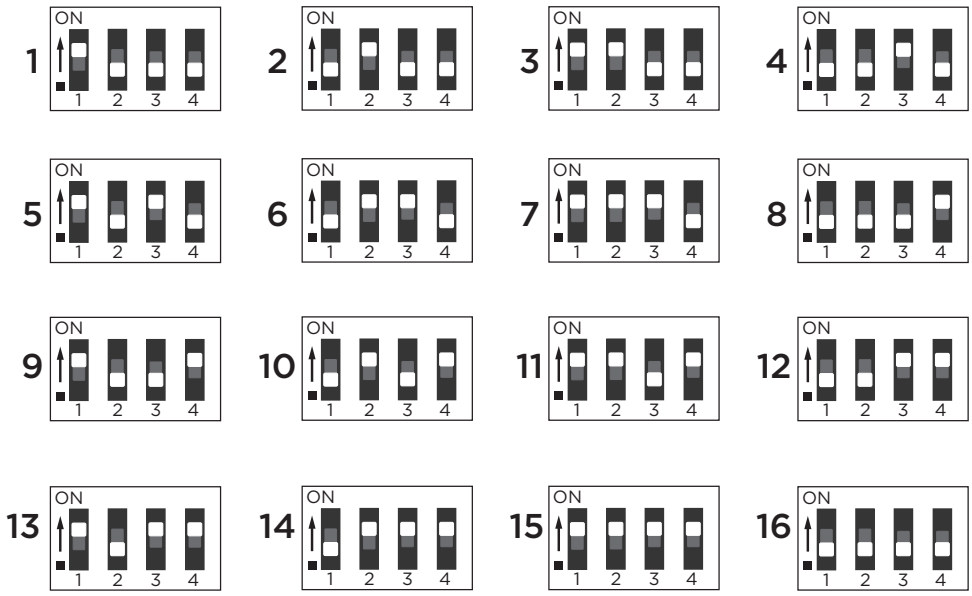

Figure 12: Keypad/AX Bus Addresses

734 Address Table

To set the module's address, move the DIP switches to the appropriate positions. See Figure 11 for Keypad Bus and AX-Bus DIP switch positions.

KEYPAD BUS		AX-BUS									
Device/ Door	Zones	Device/ Door	Zones	Device/ Door	Zones	Device/ Door	Zones	Device/ Door	Zones	Device/ Door	Zones
1	11-14	501	501-504	601	601-604	701	701-704	801	801-804	901	901-904
2	21-24	505	505-508	605	605-608	705	705-708	805	805-808	905	905-908
3	31-34	509	509-512	609	609-612	709	709-712	809	809-812	909	909-912
4	41-44	513	513-516	613	613-616	713	713-716	813	813-816	913	913-916
5	51-54	517	517-520	617	617-620	717	717-720	817	817-820	917	917-920
6	61-64	521	521-524	621	621-624	721	721-724	821	821-824	921	921-924
7	71-74	525	525-528	625	625-628	725	725-728	825	825-828	925	925-928
8	81-84	529	529-532	629	629-632	729	729-732	829	829-832	929	929-932
9	91-94	533	533-536	633	633-636	733	733-736	833	833-836	933	933-936
10	101-104	537	537-540	637	637-640	737	737-740	837	837-840	937	937-940
11	111-114	541	541-544	641	641-644	741	741-744	841	841-844	941	941-944
12	121-124	545	545-548	645	645-648	745	745-748	845	845-848	945	945-948
13	131-134	549	549-552	649	649-652	749	749-752	849	849-852	949	949-952
14	141-144	553	553-556	653	653-656	753	753-756	853	853-856	953	953-956
15	151-154	557	557-560	657	657-660	757	757-760	857	857-860	957	957-960
16	161-164	561	561-564	661	661-664	761	761-764	861	861-864	961	961-964

Table 2: Device Addresses and 734 Zone Numbers

9 Connect the Power Supply

Power for the 734 can be provided by a 12 or 24 VDC power supply. The 12 VDC power can be provided by the panel keypad bus or from a separate power supply. The 24 VDC power supply can be connected directly to the relay terminal block (J1).

Warning: To avoid the risk of equipment damage, do not exceed 750 mA total output current for zones connected to the module.

PROGRAM THE PANEL

To access the Programmer menu, reset the panel, enter **6653** (PROG), then press **CMD**.

After completing each of the following steps, press **CMD** to advance to the next option. Refer to the panel programming guide as needed.

```
DEVICE SETUP
```

DEVICE SETUP

Advance to **DEVICE SETUP**, then press a select area or top row key to enter the setup menu.

```
DEVICE SETUP
DEVICE NO: -
```

Device Number

Set the module's address. For information about valid addresses, refer to Table 2.

```
DEVICE SETUP
*UNUSED*
```

Device Name

Press any select area or top row key, then enter a name for the module.

```
DEVICE SETUP
TYPE:          DOOR
```

Device Type

Press any select area or top row key, then select **DOOR** as the device type.

```
DEVICE SETUP
COMM TYPE:     AX-BUS
```

Communication Type

If the module is connected to the Keypad Bus, select **KPD** (Keypad Bus). If the module is connected to the AX-Bus, select **AX-BUS**. Press any select area or top row key to display available options.

Configure additional options as needed. To configure specific options for the module locally, do not program **CARD OPTIONS** or **734 OPTIONS** in Device Setup.

PROGRAM THE 734

When you program a 734, you can use a keypad connected to the 734 programming header and set to address 1. For 12 V applications, connect the keypad to the module using a Model 330 4-wire harness. For 24 V applications, connect the keypad to the module using a Model 330-24 4-wire programming harness with in-line resistor.

Caution: Do not connect a keypad using a standard Model 330 harness if using a 24 V power supply! Damage to the keypad could occur.

You can also program the 734 from an XR Series or XT75 Control Panel. If you choose to program the 734 from the panel, all future programming should be performed through the panel. The panel's programming overrides any programming performed from a keypad connected to the 734. While the 734 is in programming mode, it will not be able to communicate with the panel.

Caution: OSDP readers can only be programmed locally from the module with a keypad. To properly bond the reader to the module, the 734 must be new or initialized and the reader must be new or factory reset. After programming is complete and the keypad is disconnected, the reader is bonded to the module and cannot be reprogrammed with a different secure key until it is factory reset by the manufacturer.

```
734  PROGRAMMING
VER  VVV  MM/DD/YY
```

PROGRAMMER MENU

When you connect the keypad to the 734 module, the version number and release date display. Press **CMD** to advance to Initialization Options.

```
INITIALIZE ALL?
          NO   YES
```

INITIALIZATION OPTIONS

These options can set the 734 module's programming memory back to factory defaults. Press any select key or area to enter the Initialization Menu. Press **CMD** to advance to "Access Options".

Note: If programming an OSDP reader, the module must be initialized and the reader must be new or set to factory defaults by the manufacturer.

```
ARE YOU SURE?
          YES   NO
```

Initialize Confirm Option: After selecting **YES** to clear the Access Options, the 734 displays **SURE? YES NO** for confirmation to clear the memory. This is a safeguard against accidentally erasing the programming. No memory is cleared from the programming until you answer **YES** to the **SURE?** option. Selecting **NO** leaves communication options unchanged.

ACCESS OPTIONS

Reader Protocol Type

```
READER PROTOCOL
TYPE       WIEGAND
```

Set the 734 to work with Wiegand or OSDP card readers. Press any top row key or select area to change the module's Reader Protocol Type. The default is **WIEGAND**.

```
READER PROTOCOL:
WIEGAND       OSDP
```

If you choose Wiegand, the menu advances to "Activate Zone 2 Bypass". If you choose OSDP, the menu advances to OSDP LED Control.

```
LED CONTROL:
          NO   YES
```

OSDP LED Control

Select **YES** to enable reader LED operation. Select **NO** to disable reader LED operation. For more information, refer to Connect an OSDP Card Reader.

```
BUZZER CONTROL:
          NO   YES
```

OSDP Buzzer Control

Select **YES** to enable built-in reader annunciation. Select **NO** to disable built-in reader annunciation. For more information, refer to Connect an OSDP Card Reader.

```
TAMPER CONTROL
              NO  YES
```

OSDP Tamper Control

Select **YES** to enable tamper control for the 734 Access Control Module. Select **NO** to disable tamper control. Default is **NO**. This feature is only available for XR Series panels with Version 231 (1/25/24) or higher and 734 Access Control Modules with Version 107 (11/16/23) and 7873 Series Keypad Rev 12.

To test the OSDP Tamper Control, ensure the OSDP reader's tamper is no longer satisfied and observe the tamper message at the keypad and in messages sent to the Monitoring Center.

```
SECURE KEY
```

OSDP Secure Key

The secure key is programmed into the OSDP reader and is used to establish 128-bit AES encrypted two-way communication between the reader and module.

Record this key and store it in a secure location away from the module and reader. After the reader is bonded to the module, the secure key cannot be changed in the reader or retrieved from 734 programming. Replacement modules can be bonded to any compatible reader with the reader's secure key.

Caution: OSDP readers can only be programmed locally from the module with a keypad. To properly bond the reader to the module, the 734 must be initialized and the reader must be new or factory reset. After programming is complete and the keypad is disconnected, the reader is bonded to the module and cannot be reprogrammed with a different secure key until it is factory reset by the manufacturer.

```
SECURE KEY
****************
```

Enter a secure key up to 16 alphanumeric characters. These characters are visible until **CMD** is pressed.

```
ACTIVATE ZONE 2
BYPASS?       NO  YES
```

Activate Zone 2 Bypass

Select **YES** to activate the zone 2 bypass operation. Selecting **NO** allows standard zone operation on zone 2. The default is **NO**.

If the door being released by the 734 module is protected (contact installed), a programmable bypass entry/exit timer can be provided by connecting its contact wiring to module zone 2. When the onboard Form C relay activates and the user opens the door connected to zone 2, the zone is delayed for the number of seconds programmed in **ZONE 2 BYPASS TIME** allowing the user to enter/exit during an armed period.

If zone 2 does not restore (door closed) within the programmed time, the piezo sounds every other second during the last ten seconds. If zone 2 restores prior to the end of the programmed time, the piezo silences. If the zone does not restore before the programmed time, the 734 ends the bypass and indicates the open or short zone condition to the panel.

ZONE 2 BYPASS
TIME: **40**

Zone 2 Bypass Time

Enter the number of seconds to elapse before the bypass timer expires. The range is 20-250 seconds. Press any select key or area to enter the number of seconds. The default is **40** seconds. Figure 13 shows how the bypass option works.

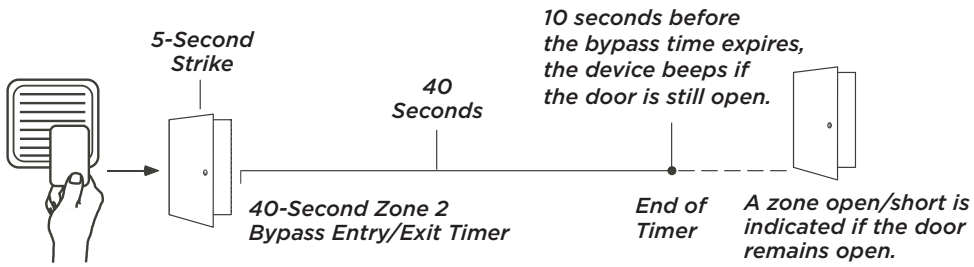

Figure 13: Zone 2 Bypass Timeline

RELOCK ON ZONE 2
CHANGE? **NO** YES

Relock on Zone 2 Changes

Selecting **YES** turns the relay off when zone 2 changes state. Selecting **NO** leaves the relay on when zone 2 changes state. Turning off the relay allows a long strike time to be automatically ended upon zone 2 change and relocks the door. The default is **NO**.

ACTIVATE ZONE 3
REX? **NO** YES

Activate Zone 3 Request to Exit

Selecting **YES** activates the zone 3 Request to Exit (REX) option. Selecting **NO** allows standard zone operation on zone 3. Default setting is **NO**.

Connect a motion sensing device or a mechanical switch to zone 3 to provide REX capability to the system. Zone 3 can be used to activate the strike relay and bypass or activate bypass only. For zone wiring details, refer to Figure 8.

Activate Strike Relay and Bypass

Wire zone 3 as normally open with a 1k Ohm EOL resistor.

When zone 3 shorts, the onboard Form C relay activates for the programmed number of seconds. See “Zone 3 REX Strike Time”. During this time, the user can open the protected door to start the programmed zone 2 bypass entry/exit timer. After the programmed number of seconds, the relay restores the door to its locked state.

Activate Bypass Only

Wire zone 3 as normally closed with an in-line 1k Ohm resistor.

When zone 3 opens from a normal state, only a bypass occurs and the onboard relay does not activate.

ZN 3 REX STRIKE
TIME: **5**

Zone 3 REX Strike Time

Enter the number of REX seconds to elapse. The range is 5 to 250 seconds. Press any select key or area to enter the number of seconds. The default is **5** seconds.

ACTIVATE ONBOARD
SPEAKER? **NO** YES

Activate Onboard Speaker

Select **YES** to enable the onboard piezo for local annunciation, such as alarm and trouble annunciations. Select **NO** to turn the speaker off for all operations. This does not affect remote annunciator open collector (RA) operation. The default is **NO**.

CARD FORMATS
DMP CUSTOM ANY

Card Formats

Select **DMP** to allow credentials that use a 26 - 45 bit data string. The menu advances to “Require Site Code”.

Select **CUSTOM** to disable DMP format and program slots 1-8 as needed. The menu advances to “Card Format Number”.

Select **ANY** to allow all card reads to activate the door strike relay. The door strike relay is activated for the length of time programmed in **ZN 3 REX TIME**. No user code information is sent to the panel. The menu advances to “No Communication with Panel”.

The default card format is **DMP**.

CARD FORMATS
FORMAT NO: -

Card Format Number

Notice: If you see CARD OPTIONS, refer to LT-0737C.

Select the slot number (1-8) that you want to program for a custom non-DMP card format. The format that is programmed into slot 1 is the default format. In the event that a card with an unrecognized format is used, that card will be read in the format that is programmed in slot 1. To restrict card reads to specific formats, only program slots 2-8.

See “Public Card Formats” for some publicly available card formats that can be used with the 734. Other private or custom formats may also be compatible. Please contact the credential supplier or manufacturer for the bit structure.

Note: If you select slot 1 and you are upgrading from XR panel version 182 or earlier, **FORMAT NAME** will automatically be named **SINGLE CARD FORMAT** and **WIEGAND CODE LENGTH** will default to 45.

FORMAT NAME
UNUSED

Format Name

Press any select area to rename the card format. Press **CMD** to save and advance.

WIEGAND CODE
LENGTH: **26**

Wiegand Code Length

When using a custom credential, enter the total number of bits to be received in Wiegand code including parity bits.

Press any select key or area to enter a number between 1-255 to equal the number of bits. Default is **26** bits.

An access card contains data bits for a site code, user code, and start/stop/parity bits. The starting position, location, and code length must be determined and programmed into the keypad. See Figure 14.

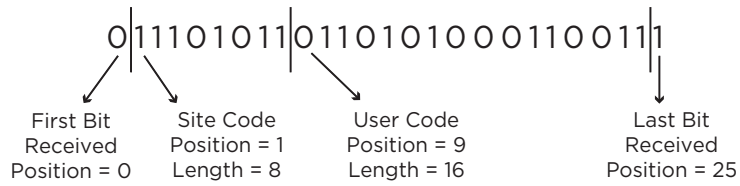

Example: Wiegand Code Length = 26 bits

Figure 14: Wiegand Data Stream Bit Location

SITE CODE
POS: **1** LEN: **8**

Site Code Position and Length

Enter the site code start position and length in the data string. Press select area 2 to clear the site code start position and enter a number between 0-255. Press **CMD** to save. Default is **1**.

Press select area 4 to clear the site code length and enter a number between 1-24. Press **CMD** to save. Default is **8**.

USER CODE
POS: **9** LEN: **16**

User Code Position and Length

Define the user code start bit position and length. Press select area 2 to clear the user code position and enter a number between 0-255. Press **CMD** to save. Default is **9**.

Press select area 4 to clear the user code length and enter a number between 16-64. Press **CMD** to save. Default is **16**.

REQUIRE SITE
CODE: **NO** YES

Require Site Code

Press the top row select key or area under **YES** to use a site code and press **CMD** to view the site code entry display. Press **NO** to advance to **NO OF USER CODE DIGITS**. Default is **NO**.

In addition to user code verification, door access is only granted when any one site code programmed at the **SITE CODE ENTRY** option matches the site code received in the Wiegand string.

SITE CODE 1:

Site Code Display: You can program up to eight 8-digit site codes. The site code range is 0-16,777,214.

In the keypad display, enter site code 1 and press **CMD**. The display will ask for site code 2 followed by site code 3 and so on. When you have selected the site code you want to change, press **CMD.**

NO OF USER CODE
DIGITS: **5**

Number of User Code Digits

The 734 module recognizes user codes from 4-12 digits long. Press any top row select key or area to enter a user code digit length. This number must match the user code number length being programmed in the panel. The device will recommend a number of user code digits based on the user code length. Default is **5**.

All bits are read and converted into a decimal number string. The number string is left padded with 0 (zero) if needed for long user code lengths.

Example:	# decoded	1234567
	10 digits	0001234567
	4 digits	4567

CARD FORMATS
26 BIT ADDED

Card Format Added/Changed (Custom Format)

When a custom card format is added successfully, the keypad displays *xx* **BIT ADDED**, where *xx* is the Wiegand code length. When the format is changed, the keypad displays *xx* **BIT Changed**. Press **CMD**. The menu returns to "Card Format Number". Program another custom card format or press **CMD** to advance to **NO COMM WITH PNL**.

NO COMM WITH PNL
OFF

No Communication with Panel

Define the relay action when communication with the panel has not occurred for 5 seconds: **OFF**, **SITE**, **ANY**, **ON**, or **LAST**. Default is **OFF**. Press any select key or area to change the default relay action:

OFF SITE ANY ON

Press the first select key or area to choose **OFF** (Relay Always Off). The relay does not turn on when any Wiegand string is received. **OFF** does not affect any REX operation. If communication is lost during a door strike, the relay remains on for the door strike duration but turns off at the end of the door strike timer.

OFF SITE ANY ON

Press the second select key or area to choose **SITE** (Accept Site Code). Door access is granted when the Wiegand site code string received matches any site code programmed at Site Code. Refer to "Require Site Code" for more information.

OFF SITE ANY ON

Press the third select key or area to choose **ANY** (Any Wiegand Read). Access is granted when any Wiegand string is received.

OFF SITE ANY ON

Press the fourth select key or area to choose **ON** (Relay Always On). The relay is always on.

LAST

Press **CMD** to display additional actions. Press the first select key or area to choose **LAST** (Keep Last State). The relay remains in the same state and does not change when communication is lost.

REMOVE KEYPAD

REMOVE KEYPAD

After programming is saved, the **REMOVE KEYPAD** option continually displays with no timeout if the keypad remains connected to the module. After five seconds, the piezo begins sounding continually. To disconnect the keypad and silence the piezo, remove the keypad harness.

ADDITIONAL INFORMATION

Public Card Formats

CARD FORMAT	WIEGAND CODE LENGTH	SITE CODE POSITION	SITE CODE LENGTH	USER CODE POSITION	USER CODE LENGTH	USER CODE DIGITS
H10301 26-Bit	26	1	8	9	16	5
H10302 37-Bit w/o FAC	37	0	1	1	35	11
H10304 37-Bit w/ FAC	37	1	16	17	19	6
Farpointe 39-Bit	39	1	17	18	20	7
Corporate 1000 35-Bit	35	2	12	14	20	6
Corporate 1000 48-Bit	48	2	22	24	23	7
DMP Bluetooth 56-Bit	56	1	16	17	34	10
DMP Wavelynx 40-Bit	40	0	1	0	40	10

Readers and Credentials

COMPATIBLE WIEGAND READERS	COMPATIBLE CREDENTIALS	COMPATIBLE WAVELYNX READERS	COMPATIBLE OSDP PROXIMITY READERS
• P-300 Cascade Proximity Reader • P-500 Alps Proximity Reader • P-620 Denali Proximity Reader with Keypad • P-640 Patagonia Proximity Reader with Keypad • MP-5365 MiniProx™ Proximity Reader • MX-5375 MaxiProx® Proximity Reader • PP-6005B ProxPoint® Plus Proximity Reader • PR-5355 ProxPro Proximity Reader With Keypad • PR-5455 ProxPro® II Proximity Reader • TL-5395 ThinLine II® Proximity Reader • SR3 Bluetooth and Proximity Reader	• PSC-1 Standard Light Proximity Card • PSK-3 Proximity Key Ring Tag • PSM-2P ISO Imageable Proximity Card • 1306 Prox Patch™ • 1326 Proxcard II® Card • 1346 ProxKey III® Access Device • 1351 ProxPass® • 1386 IsoProx II® Card • DE2 MIFARE® DESfire® EV2 Smartcard • CSK-2 MIFARE® DESfire® EV2 Key Fob Smartcard	• AX-10 Mullion Mount Reader • AX-15 Mullion Mount Reader w/ Pin Pad • AX-20 Single Gang Reader • AX-25 Single Gang Reader w/ Pin Pad • ET10-7WS Mullion Mount Reader • ET20-7WS Single Gang Reader • ET25-7WS Single Gang Reader w/ Pin Pad	• CSR-35-OSDP Bluetooth Smartcard Reader • DELTA3-OSDP Mullion Mount Smartcard Reader* • DELTA5-OSDP Single-Gang Box Mount Smartcard Reader* • DELTA6.4-OSDP Smartcard Reader With Keypad* • PCR-35-L-H-A Mobile-Ready Proximity Reader

OSDP capability for 734 modules was designed and tested with Farpointe readers. Other reader brands may be usable, but have not been tested with 734 modules and are not deemed compatible.

*Delta Proximity Readers and Credentials not evaluated by UL.

REFERENCE

UL Commercial Fire

The 734 Interface Module must be used in conjunction with at least one DMP 630F keypad.

Any Auxiliary Power Supplies must be regulated, power limited, and listed for Fire Protective Signaling Service.

UL Access Control

The access relay must be configured as fail-safe or fail-secure as determined by the local Authority Having Jurisdiction (AHJ). This system is not intended to be used in place of listed panic hardware.

The power supply must be a listed commercial burglary/household fire, power limited, Class 2 with a compatible voltage range for the product. The 734 requires a 12 or 24 VDC power source.

UL Commercial Burglary (XR Series Control Panels)

When using the zones of the 734 in a listed application, place the module in a listed enclosure and connect a DMP Model 307 Clip-on Tamper Switch to the enclosure programmed as a 24-Hour zone.

The 734 Access Control features have not been investigated by ULC.

The 734 zones can be used in a Low Risk application. For Medium or High Risk applications, refer to the Dual Zone Protection diagram in the XR150/XR550 Canadian installation guide.

Wiring Specifications

- DMP recommends using 18 or 22-gauge unshielded wire for all keypad and AX-Bus/LX-Bus circuits. Do not use twisted pair or shielded wire for AX-Bus/LX-Bus and Keypad Bus data circuits. All 22-gauge wire must be connected to a power-limited circuit and jacket wrapped.
- On Keypad Bus circuits, to maintain auxiliary power integrity when using 22-gauge wire do not exceed 500 ft. When using 18-gauge wire do not exceed 1,000 ft. To increase the wire length or to add devices, install an additional power supply that is listed for Fire Protective Signaling, power limited, and regulated (12/24 VDC nominal) with battery backup.

  Note: Each panel allows a specific number of supervised keypads. Add additional keypads in the unsupervised mode.

- Maximum distance for any one bus circuit (length of wire) is 2,500 ft regardless of the wire gauge. This distance can be in the form of one long wire run or multiple branches with all wiring totaling no more than 2,500 ft. As wire distance from the panel increases, DC voltage on the wire decreases. Maximum number of AX-Bus/LX-Bus devices per 2,500 ft circuit is 40.
- Maximum voltage drop between the panel (or auxiliary power supply) and any device is 2 VDC. If the voltage at any device is less than the required level, add an auxiliary power supply at the end of the circuit. When voltage is too low, the devices cannot operate properly.

For additional information refer to the panel's Installation Guide or the 710 Installation Sheet (LT-0310).

SPECIFICATIONS

Primary Power	8.5 VDC to 28.5 VDC
Current Draw	
Standby	240 mA (Includes 200 mA for proximity reader)
Alarm	260 mA (Includes 200 mA for proximity reader)
Form C Relay	35 mA at 12/24 VDC
Zones	5 VDC, 2 mA max
Dimensions	4.5 W x 2.75 H x 1.75 D in
	(11.43 W x 7 H x 4.45 D cm)
Weight	5.6 oz (0.16 kg)

COMPATIBILITY

Wiegand

- XT Series Control Panels
- XR Series Control Panels

OSDP

- XT Series Control Panels
- XR Series Control Panels
- 734 Series Modules with Firmware Version 106 (12/9/19) and Hardware Level 102

CERTIFICATIONS

- FCC Part 15
- California State Fire Marshal (CSFM)
- New York City (FDNY)

Underwriters Laboratory (UL) Listed

ANSI/UL 294	Access Control System Units
Level I	Destructive Attack and Line Security
Level IV	Endurance and Standby Power
ANSI/UL 365	Police Connected Burglar
ANSI/UL 609	Local Burglar Alarm Units and Systems
ANSI/UL 1076	Proprietary Burglar Alarm Units and Systems
ANSI/UL 1023	Household Burglar-Alarm System Units
ANSI/UL 1610	Central Station Burglar-Alarm Units
ANSI/UL 864	Fire Protective Signaling
ANSI/UL 985	Household Fire-warning
ULC S304	Central and Monitoring Station Burglar Alarm
ULC/ORD-C1076	Proprietary Burglar
ULC Subject-C1023	Household Burglar
ULC S545	Household Fire

FCC Information

This device complies with Part 15 of the FCC Rules. Operation is subject to the following two conditions:

1. This device may not cause harmful interference, and
2. This device must accept any interference received, including interference that may cause undesired operation.

Changes or modifications made by the user and not expressly approved by the party responsible for compliance could void the user's authority to operate the equipment.

Note: This equipment has been tested and found to comply with the limits for a Class B digital device, pursuant to part 15 of the FCC Rules. These limits are designed to provide reasonable protection against harmful interference in a residential installation. This equipment generates, uses and can radiate radio frequency energy and, if not installed and used in accordance with the instructions, may cause harmful interference to radio communications. However, there is no guarantee that interference will not occur in a particular installation. If this equipment does cause harmful interference to radio or television reception, which can be determined by turning the equipment off and on, the user is encouraged to try to correct the interference by one or more of the following measures:

- Reorient or relocate the receiving antenna.
- Increase the separation between the equipment and receiver.
- Connect the equipment into an outlet on a circuit different from that to which the receiver is connected.
- Consult the dealer or an experienced radio/TV technician for help.

Industry Canada Information

This device complies with Industry Canada License-exempt RSS standard(s). Operation is subject to the following two conditions:

1. This device may not cause interference, and
2. This device must accept any interference, including interference that may cause undesired operation of the device.

Le présent appareil est conforme aux CNR d'Industrie Canada applicables aux appareils radio exempts de licence. L'exploitation est autorisée aux deux conditions suivantes:

1. l'appareil ne doit pas produire de brouillage, et
2. l'utilisateur de l'appareil doit accepter tout brouillage radioélectrique subi, même si le brouillage est susceptible d'en compromettre le fonctionnement.

Designed, engineered, and manufactured in Springfield, MO using U.S. and global components.

LT-0737 1.07 24401

© 2026

INTRUSION • FIRE • ACCESS • NETWORKS

2500 North Partnership Boulevard
Springfield, Missouri 65803-8877

800.641.4282 | DMP.com