INSTALLATION GUIDE

1102 Series
Wireless Universal Transmitter

GET STARTED

The 1102 Universal Transmitter provides an onboard terminal block as a single input, typically used with external door or window contacts. The contact operates as a single zone. The 1102 features built-in optional 128-bit AES encryption.

The 1102 also features Disarm/Disable functionality. When this option is enabled, Zone Tripped messages are disabled when the system is disarmed.

Using the onboard LED, the transmitter provides built-in survey capability to allow for single-person installations, eliminating the requirement for an external survey kit. For added security, an internal case tamper switch is provided.

What's Included

- One 1102 Transmitter
- One 3 V lithium CR123A battery
- Hardware pack

Procedure

To install an 1102, this guide walks you through these required steps:

1. Program the panel.
2. Install the battery.
3. Use the LED Survey to select a location.
4. Mount the transmitter.
5. Wire external contacts.
6. Test the transmitter.

PCB Layout

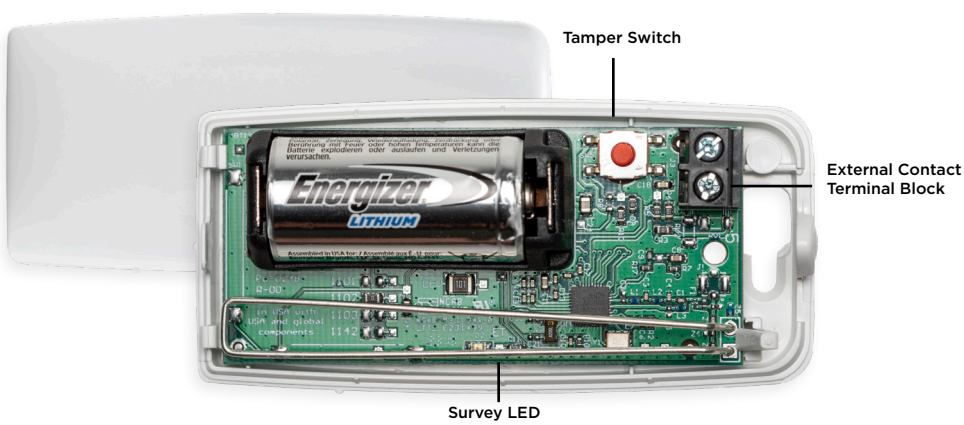

Figure 1: 1102 Layout

INSTALLATION

1 Program the Panel

Refer to the panel programming guide as needed. After completing each of the following steps, press **CMD** to advance to the next prompt.

1. At a keypad, enter **6653** (PROG) to access the Programmer Menu.
2. To enable encryption, use the two steps below and then continue to step 3. Otherwise, go to step 3.
   - Navigate to **SYSTEM OPTIONS**. At **1100 ENCRYPTION**, select **ALL** to only add encrypted wireless devices to the system. Select **BOTH** to allow both encrypted and non-encrypted wireless devices to be programmed.
   - The default passphrase appears at the **ENTER PASSPHRASE** prompt. Press **CMD** to keep the default. Press any select key or area to change the passphrase and enter an 8-character hexadecimal string (0-9, A-F).
3. At **ZONE INFORMATION**, enter the wireless zone number you would like to use (must begin in the 500 range when using X150/XR550, XR650, or XT75 Control Panels).
4. At ***UNUSED***, enter the zone name.
5. At **ZONE TYPE**, press any select key or area and select the zone type.
6. At the **NEXT ZN?** prompt, select **NO**.
7. When **WIRELESS?** displays, select **YES**.
8. At **SERIAL#**, enter the eight-digit device serial number found on device packaging.
9. At **CONTACT**, select **EXTERNAL**.
10. At **SUPRVSN TIME**, enter a supervision time. Default is **240**.
11. At **DISARM DISABLE**, select **NO** or **YES**.
12. At the **NEXT ZONE** prompt, select **YES** if you are finished programming the zone. Select **NO** if you would like to access additional programming options.
13. To save panel programming, go to **STOP** and press **CMD**.

2 Install the Battery

Use a 3.0 V lithium battery, a DMP Model CR123A battery, or an equivalent model from Sony or Murata. For listed installations, use either an Energizer® 123 battery or a CR123A battery manufactured by Panasonic or Tekcell.

1. Push the button on the end of the transmitter and separate the two halves.
2. Observing polarity, place the battery in the holder and press it into place. Refer to Figure 1 during installation.

3 Use the LED Survey to Select a Location

The transmitter provides a Survey LED capability to allow one person to confirm communication with the wireless receiver or panel while the cover is removed.

1. With the cover removed, hold the transmitter in the exact desired location.
2. Press the tamper switch to send data to the panel and determine if communication is confirmed or faulty.

✓ **Confirmed:** If communication is confirmed, for each press or release of the tamper switch the LED blinks immediately on and immediately off. Repeat this test to confirm five separate consecutive LED blinks. Any indication otherwise means proper communication has not been established.

✗ **Faulty:** If communication is faulty, the LED remains on for about 8 seconds or flashes multiple times in quick succession. Relocate the transmitter until the LED confirms clear communication.

4 Mount the Transmitter

When mounting the 1102, refer to Figure 2 for battery and mounting hole locations.

1. Remove the battery and the PCB.
2. Place the supplied #4 screw into the mounting hole and secure the transmitter to the surface.
3. Reinsert the PCB and the battery.
4. Snap the transmitter cover back onto the base.

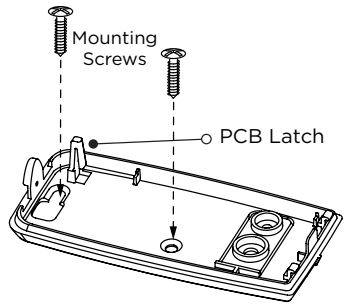

Figure 2: Mounting the Transmitter

5 Wire External Contacts

Refer to Zone Information in the appropriate panel programming guide for more information. DMP recommends using 18 or 22 AWG unshielded wire for contact connections. Do not use twisted pair or shielded wire.

1. Use a flathead screwdriver to loosen the two screws on the external contact terminal block.
2. Insert external contact wiring into the 1102 terminal block and tighten the screws.
3. Connect the other ends of the wires to the external contact as either normally open (N/O) or normally closed (N/C) without an end-of-line resistor.
4. Snap the transmitter cover back onto the base.

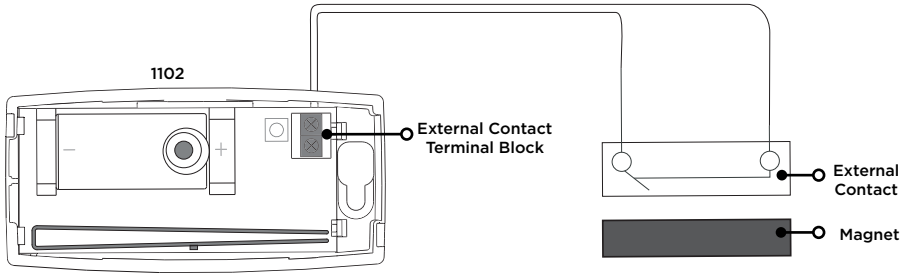

Figure 3: External Contact Wiring

6 Test the Transmitter

After the transmitter has been installed, test to confirm that it is communicating reliably with the panel. Perform a Check-in Test from a keypad that is connected to the panel. At the keypad, enter **8144** (WALK) and select WLS.

When this test is initiated, the panel automatically tests the communication between itself and each wireless zone. Wireless zones should not be manually tripped during this test. Manually tripping zones during this test could lead to a false failure.

ADDITIONAL INFORMATION

Supervision Time

When a receiver is installed, powered up, or the panel is reset, the supervision time for transmitters is reset. If the receiver has been powered down for more than one hour, wireless transmitters may take up to an additional hour to send a supervision message unless tripped, tampered, or powered up. This operation extends battery life for transmitters. A missing message may display on the keypad until the transmitter sends a supervision message.

Replace the Battery

1. Push the button on the end of the transmitter and separate the two halves.
2. Remove the old battery, observe polarity, and place the new battery in the holder.
3. Snap the cover back on the transmitter.

Sensor Reset to Clear LOBAT

Once the battery is replaced, a sensor reset is required at the keypad to clear the **LOBAT** message. On an LCD keypad, press and hold 2 for two seconds. On a graphic touchscreen keypad, press **RESET**. Enter your user code, if required. The keypad displays **SENSORS OFF** followed by **SENSORS ON**.

SPECIFICATIONS

Battery	
Life Expectancy	5 years (normal operation)
Type	3.0 V lithium CR123A
Frequency Range	905-924 MHz
Dimensions	
Transmitter Case	3.3 L x 1.6 W x 0.9 H in.
Transmitter Base	3.3 L x 1.6 W x 0.1 H in.
Housing Material	Flame retardant ABS

COMPATIBILITY

- XTL Series Control Panels
- XT Series Control Panels
- XR150/XR550 Control Panels
- XR650 Control Panels
- 1100 Series Wireless Receivers

Note: To enable encryption, Version 183 or higher is required for XTL, XT30/XT50, and XR150/XR550 Control Panels and Version 300 is required for Wireless Receivers.

CERTIFICATIONS

- FCC Part 15 Registration ID: CCKPC0191
  CCKPC0248
- Industry Canada Registration ID: 5251A-PC0191
  5251A-PC0248

Underwriters Laboratory (UL) Listed

ANSI/ UL 1023	Household Burglar Alarm System Units Accessory Magnetically Activated Switch or Door Contact Transmitter
ANSI/UL 634	Connections and Switches for use with Burglar Alarm Systems Accessory
ANSI/UL 2610	Commercial Premises Security Alarm Units

Patents

U. S. Patent No. 7,239,236

FCC Information

This device complies with Part 15 of the FCC Rules. Operation is subject to the following two conditions:

1. This device may not cause harmful interference, and
2. This device must accept any interference received, including interference that may cause undesired operation.

Changes or modifications made by the user and not expressly approved by the party responsible for compliance could void the user's authority to operate the equipment.

Note: This equipment has been tested and found to comply with the limits for a Class B digital device, pursuant to part 15 of the FCC Rules. These limits are designed to provide reasonable protection against harmful interference in a residential installation. This equipment generates, uses and can radiate radio frequency energy and, if not installed and used in accordance with the instructions, may cause harmful interference to radio communications. However, there is no guarantee that interference will not occur in a particular installation. If this equipment does cause harmful interference to radio or television reception, which can be determined by turning the equipment off and on, the user is encouraged to try to correct the interference by one or more of the following measures:

- Reorient or relocate the receiving antenna.
- Increase the separation between the equipment and receiver.
- Connect the equipment into an outlet on a circuit different from that to which the receiver is connected.
- Consult the dealer or an experienced radio/TV technician for help.

Industry Canada Information

This device complies with Industry Canada License-exempt RSS standard(s). Operation is subject to the following two conditions:

1. This device may not cause interference, and
2. This device must accept any interference, including interference that may cause undesired operation of the device.

Le présent appareil est conforme aux CNR d'Industrie Canada applicables aux appareils radio exempts de licence. L'exploitation est autorisée aux deux conditions suivantes:

1. l'appareil ne doit pas produire de brouillage, et
2. l'utilisateur de l'appareil doit accepter tout brouillage radioélectrique subi, même si le brouillage est susceptible d'en compromettre le fonctionnement.

Designed, engineered, and manufactured in Springfield, MO using U.S. and global components.

LT-0701 1.05 26175

© 2026

INTRUSION • FIRE • ACCESS • NETWORKS

2500 North Partnership Boulevard
Springfield, Missouri 65803-8877

800.641.4282 | DMP.com